TOHATSU

OWNER'S MANUAL

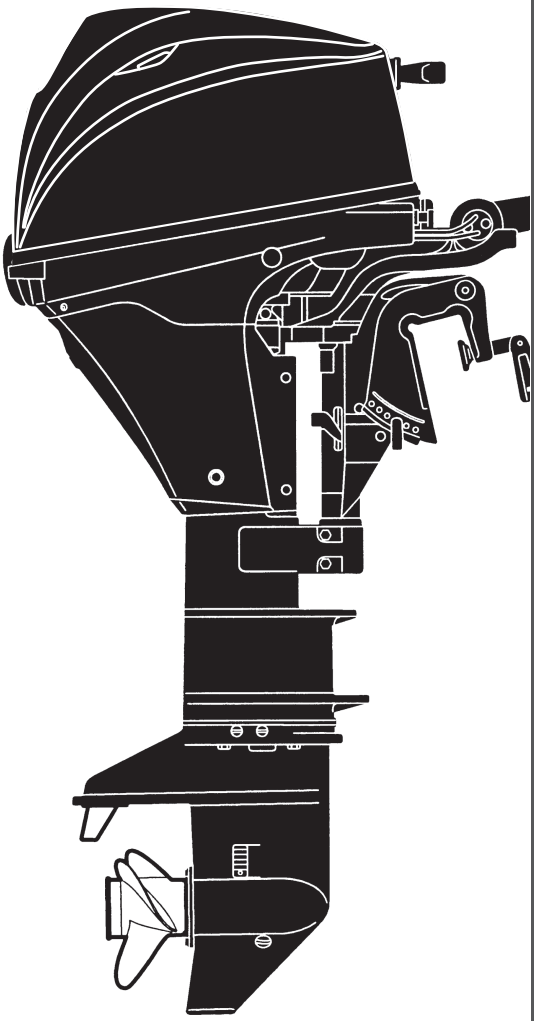

MFS 6BZ
MFS 8B
MFS 9.8B

Original instructions

OB No.003-11113-2AF1

ENOM00001-0

⚠ **READ THIS MANUAL BEFORE USING THE OUTBOARD MOTOR. FAILURE TO FOLLOW THE INSTRUCTIONS AND SAFETY PRECAUTIONS IN THIS MANUAL CAN RESULT IN SERIOUS INJURY OR DEATH. KEEP THIS MANUAL IN A SAFE LOCATION FOR FUTURE REFERENCE.**

Copyright © 2016 Tohatsu Corporation. All rights reserved. No part of this manual may be reproduced or transmitted in any from or by any means without the express written permission of Tohatsu Corporation.

YOUR TOHATSU OUTBOARD MOTOR

ENOM00006-A

To You, Our Customer

Thank you for selecting a TOHATSU outboard motor. You are now the proud owner of an excellent outboard motor that will service you for many years to come.
This manual should be read in its entirety and the inspection and maintenance procedures described later in this manual should be followed carefully. Should a problem arise with the outboard motor, please follow the troubleshooting procedures listed at the end of this manual. If the problem persists, contact an authorized TOHATSU service shop or dealer.
Please always keep this manual together with the outboard motor as a reference to everyone who uses the outboard motor. If the outboard motor is resold, make sure the manual is passed on to the next owner.

We hope you will enjoy your outboard motor and wish you good luck in your boating adventures.

TOHATSU CORPORATION

ENOM00113-0

EC DECLARATION OF CONFORMITY (DoC)

This product conforms to certain portion of the European Parliament directive. DoC contains the following information;

- Name and Address of the manufacturer.
- Applied community directives
- Reference standard
- Description of the product. (Model name and serial number)
- Signature of the responsible person (Name / Title / Date and place of issue).

ENOM00002-0

OWNER REGISTRATION AND IDENTIFICATION

Upon purchasing this product, be sure that the WARRANTY CARD is correctly and completely filled out and mailed to the addressee noted there on. This WARRANTY CARD identifies you as the legal owner of the product and serves as your warranty registration.
TO THE EXTENT PERMITTED BY APPLICABLE LAW, YOUR OUTBOARD MOTOR WILL NOT BE COVERED BY THE APPLICABLE LIMITED WARRANTY, IF THIS PROCEDURE IS NOT FOLLOWED.

ENOM00003-0

PRE-DELIVERY CHECK

Be sure that the product has been checked by an authorized TOHATSU dealer before you take delivery.

ENOM00005-A

Serial Number

In the space below, please record the outboard motor's serial number (indicated both on the clamp bracket or swivel bracket and on the cylinder block). The serial number will be needed when ordering parts, and when making technical or warranty inquiries.

Serial Number:

MF/EF model

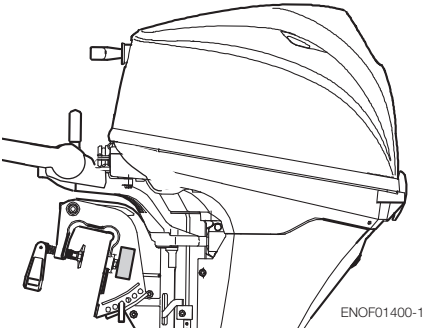

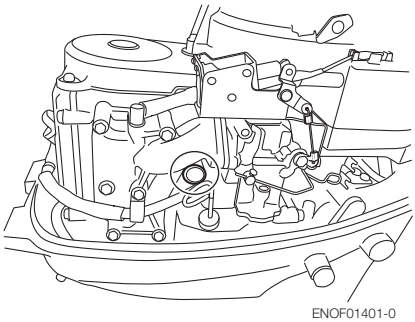

EP/EFT/EPT model

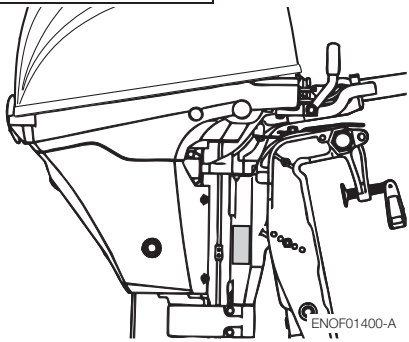

Serial Number: Date of purchase:

ENOM00007-0

NOTICE: DANGER/WARNING/CAUTION/Note

Before installing, operating or otherwise handling your outboard motor, be sure to thoroughly read and understand this Owner's Manual and carefully follow all of the instructions. Of particular importance is information preceded by the words “DANGER,” “WARNING,” “CAUTION,” and “Note.” Always pay special attention to such information to ensure safe operation of the outboard motor at all times.

ENOW00001-0

⚠ DANGER

Failure to observe will result in severe personal injury or death, and possibly property damage.

ENOW00002-0

⚠ WARNING

Failure to observe could result in severe personal injury or death, or property damage.

ENOW00003-0

⚠ CAUTION

Failure to observe could result in personal injury or property damage.

ENON00001-0

Note

This instruction provides special information to facilitate the use or maintenance of the outboard motor or to clarify important points.

CONTENTS

1. GENERAL SAFETY INFORMATION 10
2. SPECIFICATIONS 12
3. PARTS NAME 16
4. LABEL LOCATIONS 19
5. INSTALLATION 23
1. Mounting the outboard motor on boat 23
2. Remote control device installation 25
3. Battery installation 26
6. PRE-OPERATING PREPARATIONS 28
1. Fuel handling 28
2. Fuel filling 29
3. Engine oil recommendation 30
4. Break-In 31
5. Warning system 32
7. ENGINE OPERATION 35
Before starting 35
1. Fuel feeding 35
2. Starting the engine 36
3. Warming up the engine 41
4. Forward, reverse, and acceleration 42
5. Stopping the engine 44
6. Steering 46
7. Trim angle 47
8. Tilt up and down 49
9. Shallow water operation 52
8. REMOVING AND CARRYING THE OUTBOARD MOTOR 55
1. Removing the outboard motor 55
2. Carrying the outboard motor 55
3. Traillering 56
9. ADJUSTMENT 58
1. Steering friction 58
2. Throttle grip friction 58
3. Remote control lever friction 58
4. Trim tab adjustment 59
10. INSPECTION AND MAINTENANCE 60
1. Daily Inspection 61
2. Periodic Inspection 66
3. Off-season storage 77
4. Pre-season check 80
5. Submerged outboard motor 80
6. Cold weather precautions 81
7. Striking underwater object 81
8. Auxiliary outboard motor operation 81

11. TROUBLESHOOTING 82
12. ACCESSORIES KIT 84
13. PROPELLER TABLE 85

INDEX

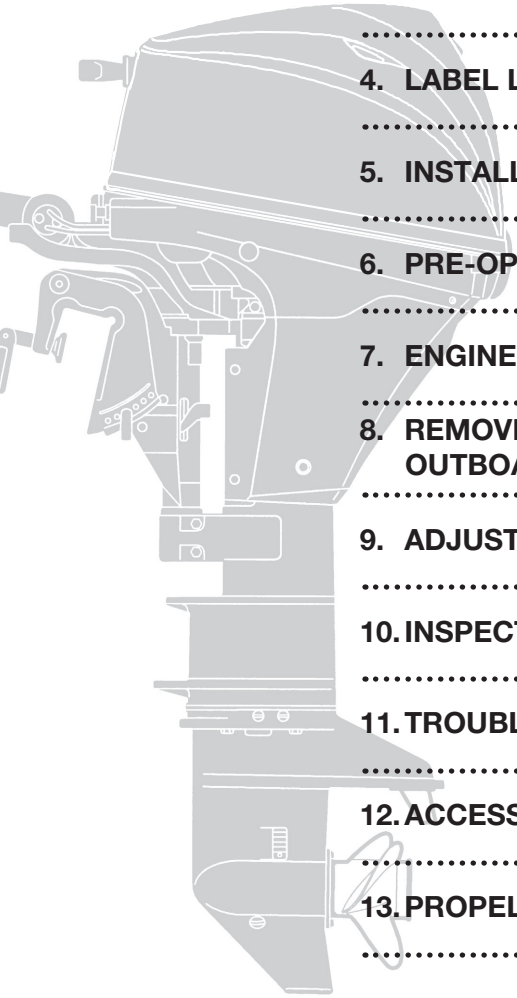

1 GENERAL SAFETY INFORMATION 1

2. SPECIFICATIONS 2

3. PARTS NAME 3

4. LABEL LOCATIONS 4

5. INSTALLATION 5

6. PRE-OPERATING PREPARATIONS 6

7. ENGINE OPERATION 7

8. REMOVING AND CARRYING THE OUTBOARD MOTOR 8

9. ADJUSTMENT 9

10. INSPECTION AND MAINTENANCE 10

11. TROUBLESHOOTING 11

12. ACCESSORIES KIT 12

13. PROPELLER TABLE 13

GENERAL SAFETY INFORMATION

ENOM00009-0

SAFE OPERATION OF BOAT

As the operator/driver of the boat, you are responsible for the safety of those aboard and those in other boat around yours, and for following local boating regulations. You should be thoroughly knowledgeable on how to correctly operate the boat, outboard motor, and accessories. To learn about the correct operation and maintenance of the outboard motor, please read through this manual carefully.

It is very difficult for a person standing or floating in the water to take evasive action should he or she see a power boat heading in his/her direction, even at a slow speed. Therefore, when your boat is in the immediate vicinity of people in the water, the outboard motor should be shifted to neutral and shut off.

ENOW00005-0

⚠ WARNING

SERIOUS INJURY IS LIKELY IF A PERSON IN THE WATER MAKES CONTACT WITH A MOVING BOAT, GEAR HOUSING, PROPELLER, OR ANY SOLID DEVICE RIGIDLY ATTACHED TO A BOAT OR GEAR HOUSING.

ENOM0008-A

EMERGENCY STOP SWITCH

The Emergency Stop Switch will stall the outboard motor when the stop switch lanyard is pulled off. This stop switch lanyard has to be attached to the operator of the outboard motor to minimize or prevent injuries from the propeller in case the operator falls overboard.

It is operator's responsibility to use the Emergency Stop Switch Lanyard.

ENOW00004-A

⚠ WARNING

Accidental activation of the Emergency Stop Switch (such as the tether being pulled out in heavy seas) could cause passengers to lose their balance and even fall overboard, or it could result in loss of power in heavy seas, strong currents, or high winds. Loss of control while mooring is another potential hazard.

To minimize accidental activation of the Emergency Stop Switch, the 500 mm (20 in.) stop switch lanyard is coiled and can extended to a full 1300 mm (51 in.).

ENOM00800-A

PERSONAL FLOATATION DEVICE

As the operator/driver and passenger of the boat, you are responsible to wear a PFD (Personal Floatation Device) while on the boat.

ENOM00010-0

SERVICING, REPLACEMENT PARTS & LUBRICANTS

We recommend that only an authorized service shop perform service or maintenance on this outboard motor. Be sure to use genuine parts, genuine lubricants, or recommended lubricants.

ENOM00011-A

MAINTENANCE

As the owner of this outboard motor, you should be acquainted with correct maintenance procedures following maintenance section of this manual (See page 60). It is the operator's responsibility to perform all safety checks and to ensure that all lubrication and maintenance instructions are complied with for safe operation. Please comply with all instructions concerning lubrication and maintenance. You should take the engine to an authorized dealer or service shop for periodic inspection at the prescribed intervals.
Correct periodic maintenance and proper care of this outboard motor will reduce the chance of problems and limit overall operating expenses.

Carbon Monoxide Poisoning Hazard

Exhaust gas contains carbon monoxide, a colorless and odorless gas which can be fatal if inhaled for any length of time.
Never start or operate the engine indoors or in any space which is not well ventilated.

Gasoline

Gasoline and its vapors are very flammable and can be explosive. Use extreme care when handling gasoline. You should be thoroughly knowledgeable on how to correctly handle gasoline by reading this manual.

SPECIFICATIONS

ENOM00810-A

MODEL FEATURE

Model		F6B			F8B			F9.8B				
Type		MF	EF	EP	MF	EF	EP	MF	EF	EFT	EP	EPT
Transom heights	S	●			●		●	●	●	●	●	●
	L	●	●	●	●	●	●	●	●	●	●	●
	UL							●		●		●
Tiller Handle		●	●		●	●		●	●	●		
Remote Control				●			●				●	●
Power Tilt										●		●
Mnual tilt		●	●	●	●	●	●	●	●		●	

ENOM00811-A

MODEL NAME EXAMPLE

F 9.8B EPTL

F	9.8	B	E	P	T	L
Model description	Horse power	Product generation	Starter system	Steering system	Tilt system	Shaft length
F= Four stroke D= Two stroke DI	-	A and up	E= Electrical start M= Manual start	P=Remote control (Pleasure) F=Tiller handle (Fisher)	T= Power trim&tilt G= Gas assist Blank= Manual tilt	S= Short 15 in L= Long 20 in UL= Ultra long 25 in

ENOM00501-0

6BZ (Available in specific region)

Item	MODEL	6BZ		
		MF	EF	EP
Overall Length	mm (in)	975 (38.4)		590 (23.2)
Overall Width	mm (in)	354 (13.9)		320 (12.6)
Overall Height S·L·UL	mm (in)	1050 (41.3) 1177 (46.3) 1304 (51.3)		
Transom Height S·L·UL	mm (in)	435 (17.1) 562 (22.1) 689 (27.1)		
Weight *1	S kg (lb)	37.0 (81.5)	—	
	L kg (lb)	38.0 (84.0)	41.0 (90.5)	
	UL kg (lb)	39.5 (87.0)	—	
Output	kW (ps)	4.4 (6)		
Max. Operating Range	min^{-1} (rpm)	5000–6000		
Idle Speed in Forward Gear	min^{-1} (rpm)	900		
Idle Speed in Neutral Gear	min^{-1} (rpm)	950		
Engine Type		4-Stroke		
Number of Cylinder		2		
Bore × Stroke	mm (in)	55 × 44 (2.17 × 1.73)		
Piston Displacement	cm^3 (Cu in)	209 (12.8)		
Exhaust System		Through hub exhaust		
Cooling System		Water cooling		
Lubrication System		Trochoid pump		
Startring System		Manual	Electric starter motor*	
Ignition System		Flywheel Magneto C.D. ignition		
Spark Plug		NGK DCPR6E		
Trim Position		6		3
Engine Oil	mL (fl.oz.)	API SH, SJ or SL 10W-30/40, Approx. 800 (27)		
Gear Oil	mL (fl.oz.)	Genuine Gear Oil or API GL5, SAE #80-90, Approx. 320 (10.8)		
Fuel		Unleaded regular gasoline : Pump posted 87 Octane (research octane rating of 91)		
Fuel Tank Capacity	L (US gal)	12 (3.17)		
Gear Reduction Ratio		2.08 (13 : 27)		
Emission Control System		EM (Engine modification)		
Operator Sound Pressure (ICOMIA 39/94) dB (A)		81.5		
Hand Vibration Level (ICOMIA 38/94) m/s^2		2.2		—

Remark: Specifications subject to change without notice.

*1 With propeller, with battery cable.

Tohatsu outboard is power rated in accordance with ISO8665 (propeller shaft output).

ENOM00502-0

8B, 9.8B

Item	MODEL	8/9.8B		
		MF	EF	EP
Overall Length	mm (in)	975 (38.4)		590 (23.2)
Overall Width	mm (in)	354 (13.9)		320 (12.6)
Overall Height S·L·UL	mm (in)	1050 (41.3) 1177 (46.3) 1304 (51.3)		
Transom Height S·L·UL	mm (in)	435 (17.1) 562 (22.1) 689 (27.1)		
Weight *1	S kg (lb)	37.0 (81.5)	40.0 (88.0)	
	L kg (lb)	38.0 (84.0)	41.0 (90.5)	
	UL kg (lb)	39.5 (87.0)	42.5 (93.5)	
Output	kW (ps)	8B : 5.9 (8)/9.8B : 7.2 (9.8)		
Max. Operating Range	min^{-1} (rpm)	5000–6000		
Idle Speed in Forward Gear	min^{-1} (rpm)	900		
Idle Speed in Neutral Gear	min^{-1} (rpm)	950		
Engine Type		4-Stroke		
Number of Cylinder		2		
Bore × Stroke	mm (in)	55 × 44 (2.17 × 1.73)		
Piston Displacement	cm^3 (Cu in)	209 (12.8)		
Exhaust System		Through hub exhaust		
Cooling System		Water cooling		
Lubrication System		Trochoid pump		
Startring System		Manual	Electric starter motor*	
Ignition System		Flywheel Magneto C.D. ignition		
Spark Plug		NGK DCPR6E		
Trim Position		6		3
Engine Oil	mL (fl.oz.)	API SH, SJ or SL 10W-30/40, Approx. 800 (27)		
Gear Oil	mL (fl.oz.)	Genuine Gear Oil or API GL5, SAE #80-90, Approx. 320 (10.8)		
Fuel		Unleaded regular gasoline : Pump posted 87 Octane (research octane rating of 91)		
Fuel Tank Capacity	L (US gal)	12 (3.17)		
Gear Reduction Ratio		2.08 (13 : 27)		
Emission Control System		EM (Engine modification)		
Operator Sound Pressure (ICOMIA 39/94) dB (A)		81.5		
Hand Vibration Level (ICOMIA 38/94) m/s^2		2.2		—

Remark: Specifications subject to change without notice.

*1 With propeller, with battery cable.

Tohatsu outboard is power rated in accordance with ISO8665 (propeller shaft output).

ENOM00503-0

8B, 9.8B

Item	MODEL	8/9.8B	
		EFT	EPT
Overall Length	mm (in)	975 (38.4)	590 (23.2)
Overall Width	mm (in)	354 (13.9)	320 (12.6)
Overall Height S·L·UL	mm (in)	1050 (41.3) 1177 (46.3) 1304 (51.3)	
Transom Height S·L·UL	mm (in)	435 (17.1) 562 (22.1) 689 (27.1)	
Weight *1	S kg (lb)	46.5 (102.5)	46.0 (101.4)
	L kg (lb)	47.5 (104.7)	47.0 (103.6)
	UL kg (lb)	49.0 (108)	48.5 (106.9)
Output	kW (ps)	8B : 5.9 (8)/9.8B : 7.2 (9.8)	
Max. Operating Range	min^{-1} (rpm)	5000–6000	
Idle Speed in Forward Gear	min^{-1} (rpm)	900	
Idle Speed in Neutral Gear	min^{-1} (rpm)	950	
Engine Type		4-Stroke	
Number of Cylinder		2	
Bore × Stroke	mm (in)	55 × 44 (2.17 × 1.73)	
Piston Displacement	cm^3 (Cu in)	209 (12.8)	
Exhaust System		Through hub exhaust	
Cooling System		Water cooling	
Lubrication System		Trochoid pump	
Startring System		Electric starter motor*	
Ignition System		Flywheel Magneto C.D. ignition	
Spark Plug		NGK DCPR6E	
Trim Position		5	
Engine Oil	mL (fl.oz.)	API SH, SJ or SL 10W-30/40, Approx. 800 (27)	
Gear Oil	mL (fl.oz.)	Genuine Gear Oil or API GL5, SAE #80-90, Approx. 320 (10.8)	
Fuel		Unleaded regular gasoline : Pump posted 87 Octane (research octane rating of 91)	
Fuel Tank Capacity	L (US gal)	12 (3.17)	
Gear Reduction Ratio		2.08 (13 : 27)	
Emission Control System		EM (Engine modification)	
Operator Sound Pressure (ICOMIA 39/94) dB (A)		81.5	
Hand Vibration Level (ICOMIA 38/94) m/s^2		2.2	—

Remark: Specifications subject to change without notice.

*1 With propeller, with battery cable.

Tohatsu outboard is power rated in accordance with ISO8665 (propeller shaft output).

PARTS NAME

ENOM00820-0

MF, EF, EP

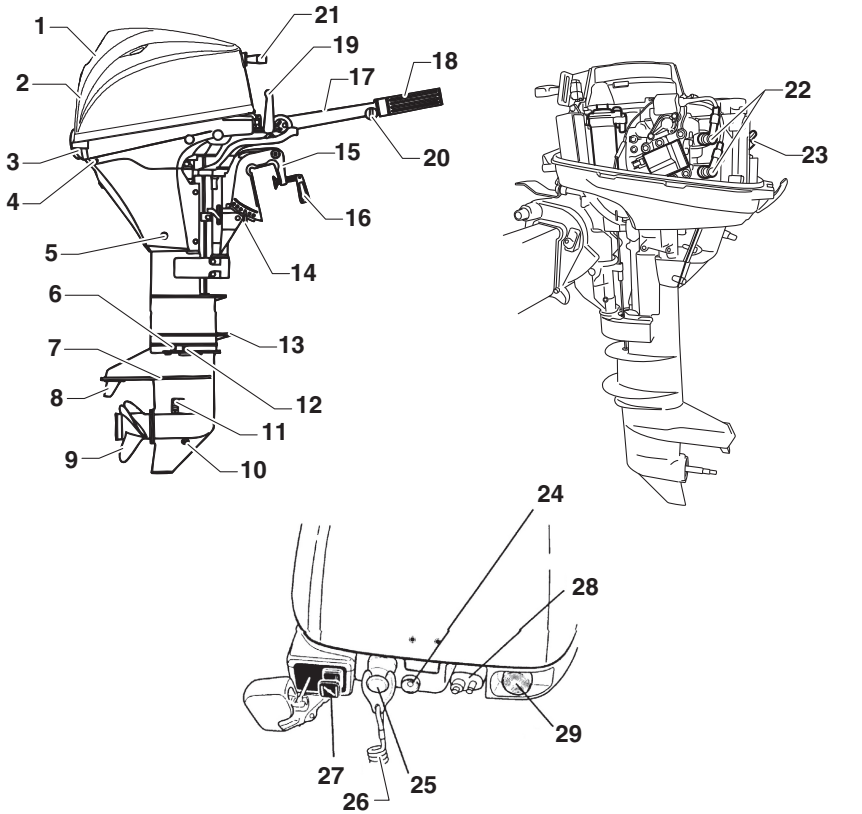

ENOF01402-1

1 Tilt Handle
2 Top Cowl
3 Bottom Cowl
4 Cooling Water Check Port
5 Oil Drain Plug
6 Water Plug
7 Anti-ventilation Plate
8 Trim Tab
9 Propeller
10 Oil Plug (Lower)
11 Cooling Water Inlet
12 Oil Plug (Upper)
13 Splash Plate
14 Thrust Rod
15 Clamp Bracket
16 Clamp Screw
17 Tiller Handle *1
18 Throttle Grip *1
19 Shift Lever *1
20 Throttle Adjust Screw
21 Ricoil Starter Handle
22 Spark Plug
23 Oil Filler Cap
24 Warning Lamp
25 Stop Switch *1
26 Stop Switch Lanyard
27 Choke Konob
28 Fuel Connector
29 Starter Switch *2

*1: Tiller handle type only
*2: Electric starter type only

ENOM00020-0

EFT, EPT

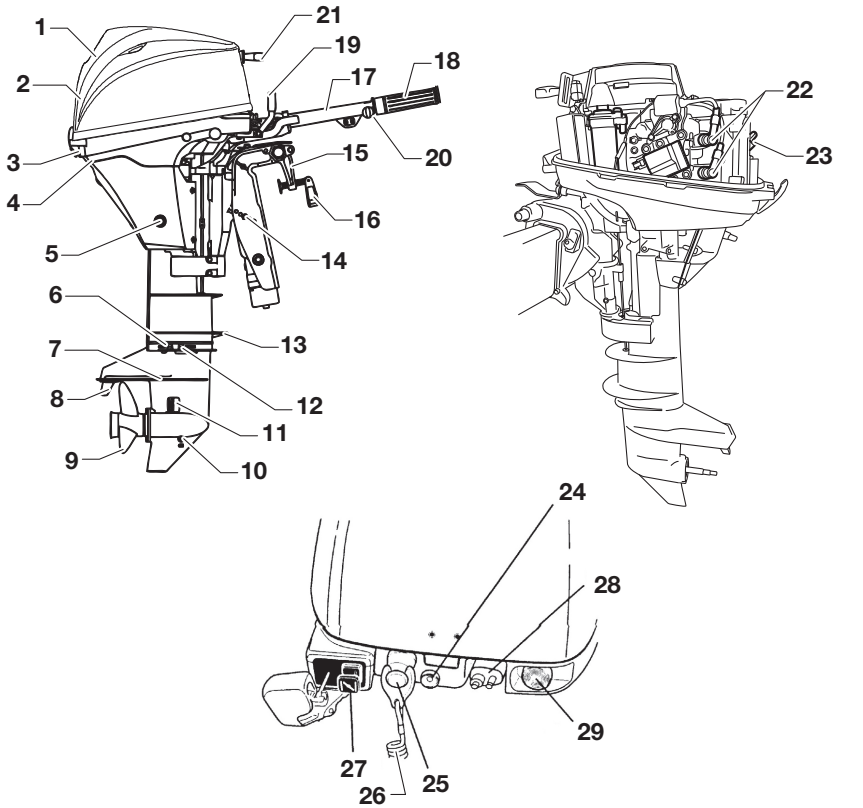

ENOF01403-1

1 Tilt Handle
2 Top Cowl
3 Bottom Cowl
4 Cooling Water Check Port
5 Oil Drain Plug
6 Water Plug
7 Anti-ventilation Plate
8 Trim Tab
9 Propeller
10 Oil Plug (Lower)
11 Cooling Water Inlet
12 Oil Plug (Upper)
13 Splash Plate
14 Tlim Lock Pin
15 Clamp Bracket
16 Clamp Screw
17 Tiller Handle *1
18 Throttle Grip *1
19 Shift Lever *1
20 Throttle Adjust Screw
21 Ricoil Starter Handle
22 Spark Plug
23 Oil Filler Cap
24 Warning Lamp
25 Stop Switch *1
26 Stop Switch Lanyard
27 Choke Konob
28 Fuel Connector
29 Starter Switch
*1: Tiller handle type only

ENOM00822-0

Remote control box & Fuel tank

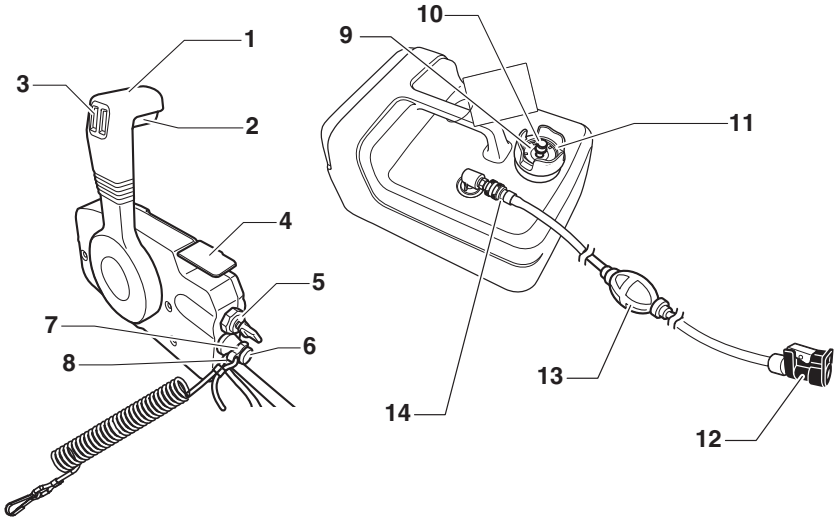

ENOF01404-0

1 Control Lever
2 Neutral lock arm
3 PTT switch
4 Free throttle lever
5 Main switch
6 Stop switch
7 Stop switch lock
8 Stop switch lanyard
9 Fuel gauge
10 Air vent screw
11 Fuel tank cap
12 Fuel connector (Engine side)
13 Primer bulb
14 Fuel connector (Fuel tank side)

LABEL LOCATIONS

ENOM00019-A

Warning label locations

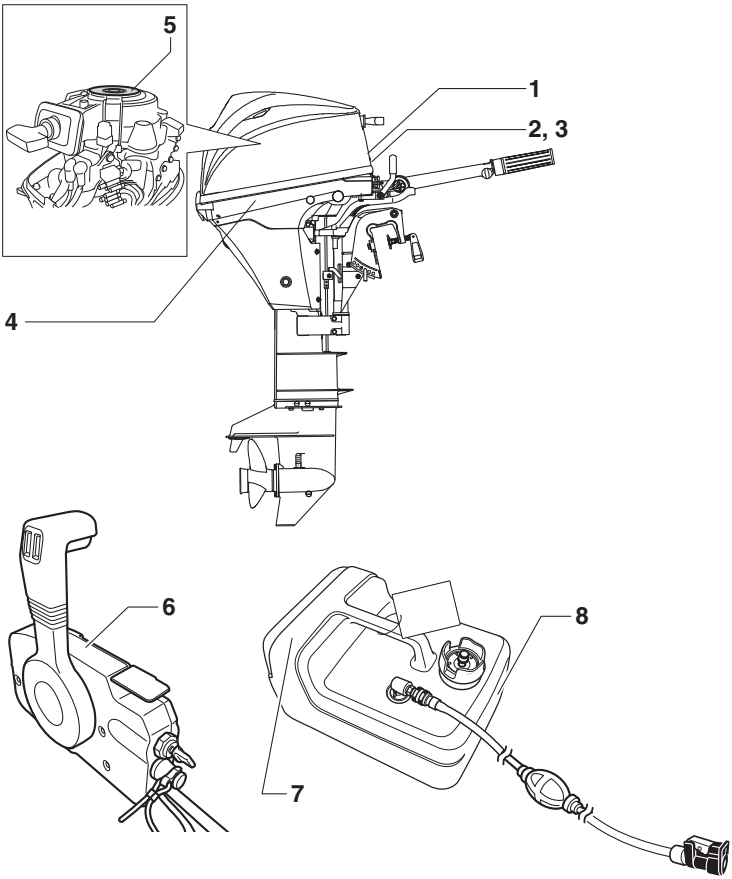

ENOF01405-1

1. Warning label regarding installation of remote control system (See page 25).

ENOF00120-0

2. Warning label regarding oil pressure (See page 32).

ENOF00131-0

3. Warning label regarding stop switch (See page 37, 38, 46)

ENOF00131-B

4. Warning label regarding position of outboard motor when setting down.

ENOF00006-0

5-1. Warning regarding emergency starting (See page 39).

5-2. Warning regarding high temperature.

5-3. Warning regarding rotating object.

5-4. Warning regarding high voltage

ENOF00005-R

6. Warning label regarding engine stop switch.

ENOF00008-0

7. Warning regarding gasoline (See page 29).

REMOVE FROM BOAT
FOR FILLING

ENOF00005-S

8. Warning regarding gasoline (See page 29).

ENOF00005-L

ENOM00019-B

CE label locations

MF/EF model

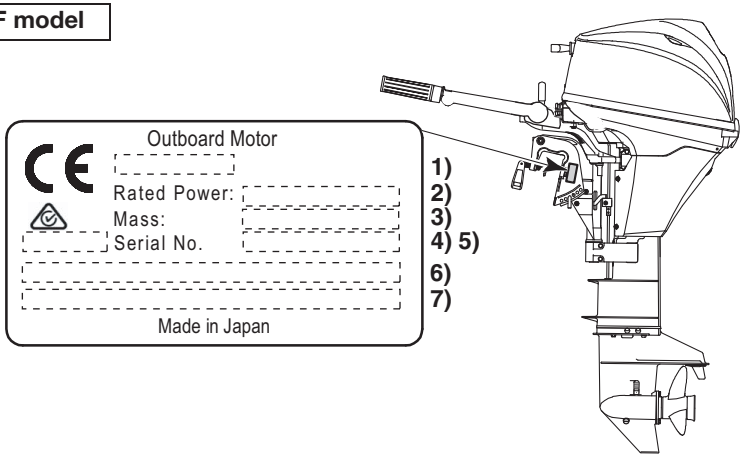

ENOF01406-1

EP/EFT/EPT model

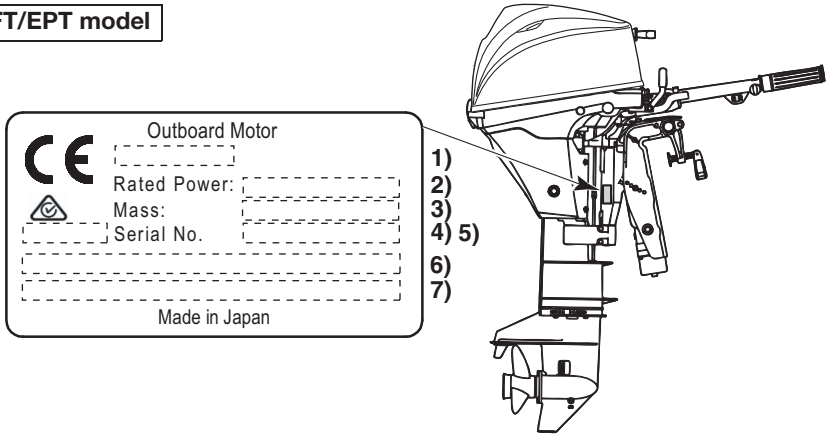

ENOF01406-A

1. Model code(Model name)
2. Rated power
3. Dry mass weight(Without propeller, with battery cable)
4. Product year
5. Serial No.
6. Manufacture name
7. Manufacture address

INSTALLATION

ENOM00024-B

1. Mounting the outboard motor on boat

ENOW00006-0

⚠ WARNING

Most boats are rated and certified in terms of their maximum allowable horsepower, as shown on the boat's certification plate. Do not equip your boat with an outboard motor that exceeds this limit. If in doubt, contact your dealer.
Do not operate the outboard motor until it has been securely mounted on the boat in accordance with the instructions below.

ENOW00009-0

⚠ WARNING

- **Mounting the outboard motor without following this manual can lead to unsafe conditions such as poor maneuverability, lack of control or fire.**
- **Loose clamp screws and/or mounting bolts can lead to the release or displacement of the outboard motor, possibly resulting in lost of control and/or serious personal injury. Be sure that fasteners are tightened to the specified torque (30 N·m (3.0 kgf·m) 13 ft·lb). Check the fasteners for tightness from time to time.**
- **Be sure to use outboard mounting fasteners included in the outboard motor package or their equivalents in terms of size, material, quality and strength. Tighten fasteners to the specified torque (30 N·m (3.0 kgf·m) 13 ft·lb). Test cruise to check if fasteners are tightened securely.**
- **Outboard motor mounting must be performed by trained service person(s) using lift or hoist with sufficient capacity.**

Keep the outboard motor in a vertical position when mounting.

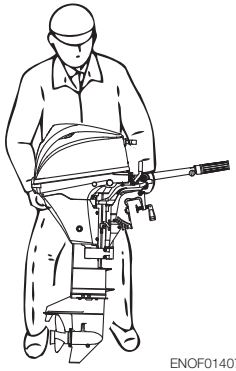

ENOF01407-1

ENOM00025-0

Position ... Above keel line

Set engine at center of boat.

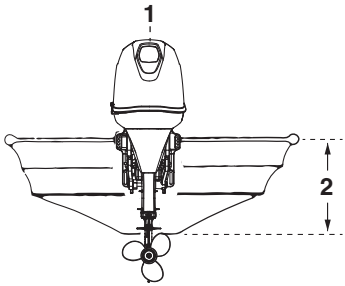

ENOF01141-0

1. Center of boat
2. Boat transom

ENOM00026-0

Transom matching

Be sure that the anti ventilation plate of the outboard motor is 5–25 mm (0.2–1 in) below the bottom of hull.
If the above condition cannot be met due to the shape of the bottom of your boat, please consult your authorized dealer.

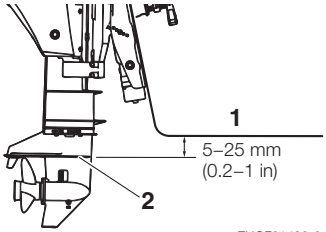

ENOF01408-0

1. Bottom of hull
2. Anti ventilation plate

ENOW00007-0

⚠ CAUTION

- **Before beginning the running test, check that the boat with maximum capacity loading floats on the water in a proper attitude. Check the position of water surface on the driveshaft housing. If the water surface is near the bottom cowling, in high waves, water may enter the engine cylinders.**
- **Incorrect outboard motor mounting height or existence of underwater object(s), such as hull bottom design, bottom surface conditions or underwater accessories, can cause water spray possibly reaching the engine through an opening of the bottom cowling during cruising. Exposing the engine to such conditions for extended periods can lead to severe engine damage.**

ENOM00830-A

Mounting bolts

Manual tilt type

1. To attach the outboard motor to the boat, tighten the clamp screws by turning their handles.
   Also, use the bolts to secure the outboard motor brackets on transom board.
   Secure the outboard motor with a rope to prevent loss overboard.

ENON00002-0

Note

A rope is not included in the standard accessories.

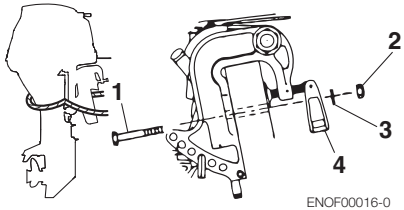

ENOF00016-0

1. Bolt (8 × 85)
2. Nut
3. Washer
4. Clamp screw

ENOW00945-0

⚠ CAUTION

- **Please inspect whether there is a loosening of the clamp screw or mounting bolts before departure.**
- **Loosening may cause a dangerous situation, such as loss of control.**

PTT type

1. To attach the outboard motor to the boat, use the bolts to secure the outboard motor brackets on transom board.

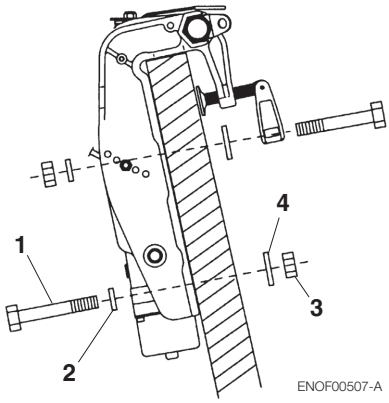

ENOF00507-A

1. Bolt (12 × 105)
2. Washer (small diameter)
3. Nut
4. Washer (large diameter)

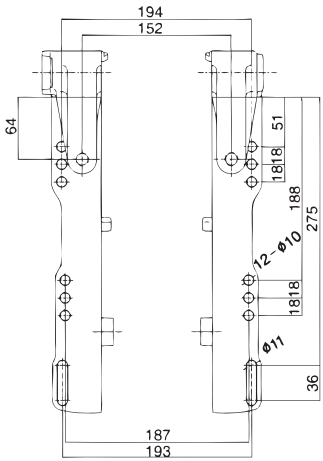

ENOF00508-0

ENOW00008-A

⚠ CAUTION

- **Mounting bolts should be installed with the bolt head at inside surface of the transom. Mounting bolts installed with the threaded end at the inside surface of the transom can cause personal injury.**
- **Tighten the bolts sufficiency, otherwise falling down of outboard could be happened.**

ENON00003-0

Notes

1. Apply sealing agent, such as silicone sealed between the bolts and the transom board holes before tightening the bolts.
2. Be sure to tighten the mounting bolt nuts to the specified torque.
   (30 N·m (3.0 kgf·m) 13 ft·lb)

ENOM00840-0

2. Remote control device installation

ENOW00850-0

Remote control box location

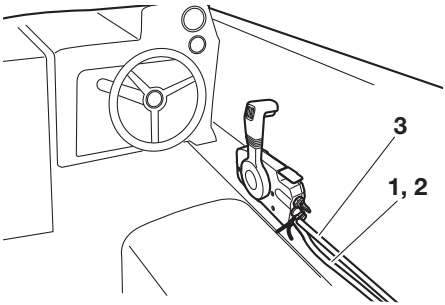

ENOF00841-0

1. Shift cable
2. Throttle cable
3. Cable harness B

Install the remote control box in a position where it is easy to reach and operate the controls.

Make sure there are no obstacles that can interfere with the operation of the remote control cable.

ENOW00850-0

Remote control cable length

ENOW00100-A

⚠ CAUTION

Be careful not to loop the remote control cables to a diameter of 406 mm (16 in) or less. Otherwise, it affects the service life of the cable.

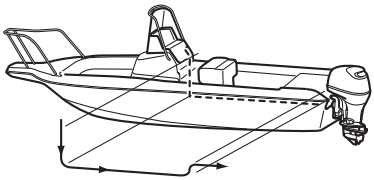

ENOF00842-0

Measure the distance from the remote control box to the outboard motor where the remote control cable should be routed.
Prepare a cable that is 300-450mm (11.8-17.7in) longer than the measured distance.
Temporarily pull the cable along the intended cable route to check its length is sufficient.
Connect the remote control cable to the engine, then run the cable to the remote control box, making sure it is not sharply bent, too taut and free from obstructions that could interfere with steering.

ENOM00029-A

3. Battery installation

ENOW00012-0

⚠ WARNING

Battery electrolyte contains sulfuric acid and thus is hazardous, causing a burn if it comes in contact with your skin, or poisonous if swallowed.
Keep battery and electrolyte away from reach of children
When handling the battery, be sure to:

- **Read all warnings shown on the battery case**
- **Prevent electrolyte from coming in contact with any part of your body. Contact can cause serious burn or, if it comes in contact with your eye, loss of sight. Use safety glasses and rubber gloves.**

In case battery electrolyte comes in contact with:

- **Skin, flush thoroughly with water.**
- **Eye, flush thoroughly with water, and then seek immediate medical treatment.**

In case battery electrolyte is swallowed:

- **Seek immediate medical treatment.**

ENOW00013-A

⚠ WARNING

Battery generates explosive hydrogen gas. Be sure to:

- **Charge the battery in a well-ventilated place.**
- **Place the battery away from any source of fire, sparks and open flames such as burners or welding equipment.**
- **Do not smoke near the battery when the battery is charging.**
- **Do not charge the battery when the electrolyte level is low. Otherwise, the battery will be damaged and may cause malfunction.**

ENOW00014-0

⚠ CAUTION

- **Make sure that the battery leads do not get stuck between the outboard motor and boat when turning, etc.**
- **The starter motor may fail to operate if the leads are incorrectly connected.**
- **Be sure to correctly connect the (+) and (—) leads. If not, the charging system will be damaged.**
- **Do not disconnect the battery leads from battery while the engine is operating, the electrical parts could be damaged.**
- **Always use a fully charged battery.**

ENOW00015-0

⚠ CAUTION

Do not use a battery that is not recommended. Use of a battery not recommended can lead to poor performance of, and/or damage to, the electrical system.

ENON00006-A

Note

Recommended battery: 12V 40Ah/5HR, 350 (Cold Cranking Amps (CCA), In case of cold whether: 12V 70Ah/5HR (650CCA))
Specifications and features of batteries vary among the manufacturers. Consult the manufacturer for details.
* The battery should be purchased separately and is not supplied with the outboard motor.

1. Place the battery box in a convenient position away from possible water spray. Securely fasten both the box and the battery so they do not shake loose.
2. Connect the positive lead (+) to the positive terminal (+) of the battery, and then connect the negative lead (—). When disconnecting the battery always remove the negative lead (—) first. After connecting the positive terminal (+), securely place a cap on it to prevent short circuits.

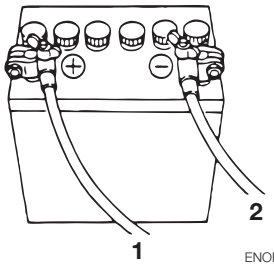

ENOF00022-0

1. Battery cord (red)
2. Battery cord (black)

PRE-OPERATING PREPARATIONS

ENOM00030-A

1. Fuel handling

ENOW000017-0

⚠ CAUTION

Use of improper gasoline can damage your engine. Engine damage resulting from the use of improper gasoline is considered misuse of the engine, and damage caused thereby will not be covered under the limited warranty.

ENOM00031-A

FUEL RATING

TOHATSU engines will operate satisfactorily when using a major brand of unleaded gasoline meeting the following specifications:

USA and Canada — having a posted pump Octane Rating of 87 (R+M)/2 minimum. Premium gasoline (92 [R+M]/2 Octane) is also acceptable. Do not use leaded gasoline.

Outside USA and Canada — Use unleaded gasoline with declared octane rating of 91 RON or over. Use of premium gasoline of 98 RON is also allowed.

ENOM00032-A

GASOLINES CONTAINING ALCOHOL

The fuel system components on your TOHATSU engine will withstand up to 10% ethyl alcohol (hererinafter referred to as the "ethanol"), content in the gasoline. But if the gasoline in your area contains ethanol, you should be aware of certain adverse effects that can occur. Increasing the percentage of ethanol in the fuel can also worsen these adverse effects. Some of these adverse effects are caused because the ethanol in the gasoline can absorb moisture from the air, resulting in a separation of the water/ethanol from the gasoline in the fuel tank.

These may cause increased:

- Corrosion of metal parts
- Deterioration of rubber or plastic parts
- Fuel permeation through rubber fuel lines
- Starting and operating difficulties

If the use of gasoline containing alcohol is inevitable, or presence of alcohol is suspected in the gasoline, it is recommended to add a filter that has water separating capability, and check the fuel system for leaks and mechanical parts for corrosion and abnormal wear more frequently.

And, in case any of such abnormality is found, discontinue the use of such gasoline and contact our dealer immediately.

If the outboard motor will only be used infrequently, please see the remarks on fuel deterioration in the STORAGE chapter (P 77) for additional information.

ENOW00020-0

⚠ CAUTION

When operating a TOHATSU engine on gasoline containing alcohol, storage of gasoline in the fuel tank for long periods should be avoided. Long periods of storage, common to boats, create unique problems. In cars, alcohol blend fuels normally are consumed before they can absorb enough moisture to cause trouble, but boats often sit idle long enough for phase separation to take place. In addition, internal corrosion may take place during stor-

age if alcohol has washed protective oil films from internal components.

ENOW00018-0

⚠ WARNING

Fuel leakage can cause fire or explosion, potentially leading to severe injury or loss of life. Every fuel system part should be checked periodically, and especially after long term storage, for fuel leak, change of hardness of rubber, expansion and/or corrosion of metals. In case any indication of fuel leakage or degradation of fuel part is found, replace relevant part immediately before continuing operation.

ENOM00043-B

2. Fuel filling

ENOW00019-0

⚠ WARNING

Do not fill the fuel tank over capacity. The rise of gasoline temperature may cause gasoline to expand which, if overfilled, may leak through air vent screw when it is open. Leaking gasoline is a dangerous fire hazard.

ENOW00028-A

⚠ WARNING

Consult an authorized dealer for details on handling gasoline, if necessary.

Gasoline and its vapors are very flammable and can be explosive.

When carrying a fuel tank containing gasoline:

- **Close the fuel tank cap and air vent screw of fuel tank cap, or gasoline vapor will be emitted through the air vent screw, creating a fire hazard.**
- **Do not smoke.**

When or before refueling:

- **Be sure to remove the static electricity charged in your body before refueling.**
- **The sparks due to static electricity may cause explosion of flammable gasoline.**
- **Stop the engine, and do not start the engine during refueling.**
- **Do not smoke.**
- **Be careful not to overfill fuel tank. Wipe up any spilled gasoline immediately.**

When or before cleaning the gasoline tank:

- **Dismount fuel tank from the boat.**
- **Place the fuel tank away from every source of ignition, such as sparks or open flames.**
- **Do the work outdoors or in a well ventilated area.**
- **Wipe off gasoline well immediately if spilled.**
-

After cleaning gasoline tank:

- **Wipe off gasoline well immediately if spilled.**
- **If the fuel tank is disassembled for cleaning, reassemble carefully. Imperfect assembly may cause a fuel leak, possibly leading to fire or explosion.**
- **Dispose aged or contaminated gasoline in accordance with local regulations.**

ENOW00029-A

⚠ WARNING

When opening fuel tank cap, be sure to follow the procedure described below. Fuel could blast out through the fuel tank cap in case the cap is loosened by using another procedure when internal pressure of fuel tank is raised by heat from sources such as sun light.

ENOW0946-0

⚠ CAUTION

Separate tank must be fixed at appropriate position so that well ventilated and tank does not move or fall down while operating.

1. Full open the air vent screw on the fuel tank cap and release internal pressure.

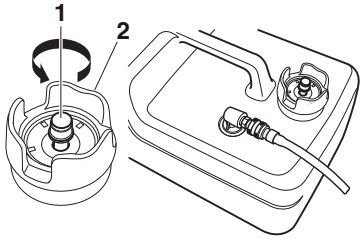

ENOF00417-0

1. Air vent screw
2. Fuel tank cap

2. Open the fuel tank cap slowly.
3. Fill the fuel carefully not to over flow.

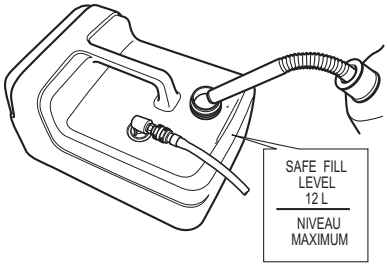

ENOF00419-A

4. After filling the tank, close the fuel tank cap.

ENOM00037-A

3. Engine oil recommendation

ENOW00022-A

⚠ CAUTION

The engine oil is drained for shipping from the factory. Be sure to fill the engine to the proper level before starting engine. (To properly fill the engine with oil follow the instructions, See page 62)

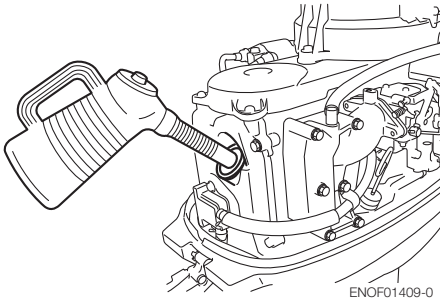

ENOF01409-0

Use only high quality 4-stroke engine oil to insure performance and prolonged engine life.
The SAE oil viscosity 10W-30 or 10W-40 FC-W outboard motor engine oil is recommended.
You can also use oils that carry the API rating of SH, SJ, or SL. Select the appropriate viscosity, based on atmospheric temperature, from the chart below.

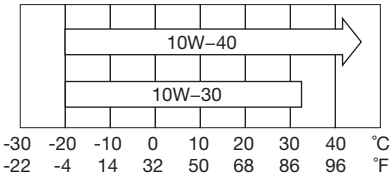

ENOF00208-0

ENOW0002A-A

⚠ CAUTION

Use of engine oils that do not meet these requirements will result in reduced engine life, and other engine problems.

]ENOM00033-A

4. Break-In

Your new outboard motor and lower unit require break-in for the moving components according to the conditions described in the following time table.
Please refer to ENGINE OPERATION section (See page 35) to learn how to correctly start and operate the outboard motor.

ENOW00024-A

⚠ WARNING

Do not operate the outboard motor in closed area or area with no forced ventilation.
Exhaust gas emitted by this outboard motor contains carbon monoxide that will cause death if inhaled continuously. Inhaling the gas initially causes symptoms such as feeling of sickness, drowsiness and headache.
During operation of the outboard motor:
- **Keep peripheral area well ventilated.**
- **Always attempt to stay on the windward side of emission.**

ENOW00023-0

⚠ CAUTION

Operating the outboard motor without break-in can shorten service life of the product.
If any abnormality is experienced during the break-in:
- **Discontinue the operation immediately.**
- **Have the dealer check the product and take proper action(s) if necessary.**

ENON00008-0

Note

Proper break-in allows outboard motor to deliver it full performance for longer service life.

	1–10 min	10 min – 2 hrs	2–3 hrs	3–10 hrs	After 10 hrs
Throttle Position	Idle	Less than 1/2 throttle	Less than 3/4 throttle	3/4 throttle	Full throttle available
Speed		Approx. 3000 min^{-1} (rpm) max	Full throttle run allowed for 1 min every 10 min	Approx. 4000 min^{-1} (rpm). Full throttle run allowed for 2 min every 10 min	

ENOM00039-0

5. Warning system

If outboard motor encounters an abnormal condition of fault, the warning horn will emit a continuous beep or intermittent short beeps and the warning lamp (LED) will synchronize with the horn and engine speed will be limited (engine will not be stopped).

See next page for conditions which will lead to an abnormal condition or fault.

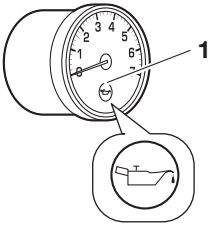

ENOF00851-A

1. Warning lamp

ENOM00040-C

Location of warning horn and lamp

■ **Warning horn**

RC model (EPT type): Located inside the remote control.

*No horn is located for tiller handle type and EP type.

■ **Warning lamp (LED)**

RC model: Located in the tachometer & bottom cowl.

Tiller handle models: Located on the bottom cowl.

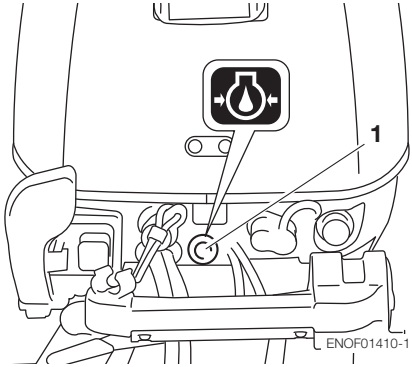

ENOF01410-1

1. Warning lamp

ENON00009-A

Note

Warning lamp for optional tachometer will synchronize with the waring lamp for engine side.

ENOM00041-C

Warning indicators, faults and remedy

Warning indicators			Description of faults	Remedy
Sound (EPT only)	Lamp (LED)	ESG		
-	On for several sec.	-	Normal system test when start up	
-	-	High speed ESG	Engine speed exceeds maximum allowable RPM	1
Continuous*2	ON*2	Low speed ESG	Low oil pressure*1	2

Remarks

*1: In this case, oil pressure switch is “ON”.

*2: It is necessary to stop the engine, if you want to stop the working indicators and re-set the warning system.

High speed ESG (Electronic Safety Governor)

High speed ESG is a device to prevent over revolution of the engine. If the load to the engine becomes light for some reason, it runs at a higher speed than the usual. In such the case, and the ESG is activated not to ignite the spark plug, therefore, the engine speed varies and be controlled under 6300 min^{-1} (rpm).

Low speed ESG

Low speed ESG is a device to prevent the engine from getting damage. If the engine has problems regarding oil pressure, the low speed ESG is activated not to ignite the spark plug, the engine speed varies and be controlled under 2800 min^{-1} (rpm).

Remedy

1. Reduce the throttle to less than half opening, and move to safe place quickly, and stop the engine.
   Check the propeller for bent or damaged blades.
   Consult an authorized dealer if engine shows the same result even after replacing propeller with new one.
2. Move to safe place quickly, and stop the engine.
   Check the engine oil level, and add engine oil if necessary.
   Consult your dealer if the engine oil level is too low or too high.

ENOW00025-A

⚠ CAUTION

- **Low speed ESG ON: Engine speed will be limited to 2800 min^{-1} (rpm), however you should not continue to run engine.**
- **High speed ESG ON: Engine speed will be limited to 6300 min^{-1} (rpm) and engine will run rough until throttle is reduced.**

ENGINE OPERATION

ENOM00042-0

Before starting

ENOW00022-A

⚠ CAUTION

The engine oil is drained for shipping from the factory. Be sure to fill the engine to the proper level before starting engine. (To properly fill the engine with oil follow the instructions. See page 62)

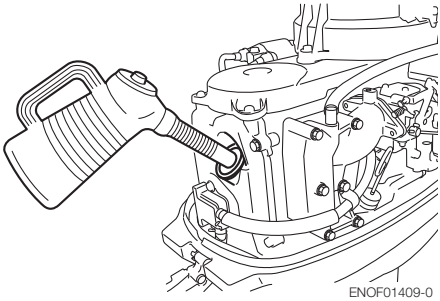

ENOF01409-0

ENOW00027-A

⚠ CAUTION

Before starting engine for the first time after reassembling engine or off-season storage, disconnect stop switch lock and crank approximately 10 times in order to prime the oil pump.

ENOM00044-A

1. Fuel feeding

ENOW00029-A

⚠ WARNING

When opening fuel tank cap, be sure to follow the procedure described below. Fuel could blast out through the fuel tank cap in case the cap is loosened by using another procedure when internal pressure of fuel tank is raised by heat from sources such as sun light.

ENOW0947-0

⚠ CAUTION

When using a separate tank, be sure that the fuel line is not kinked and is connected securely.

1. Full open the air vent screw on the fuel tank cap.

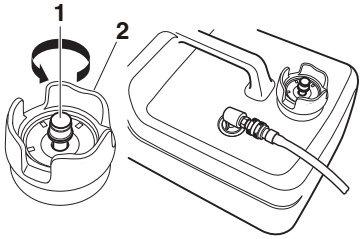

ENOF00417-0

1. Air vent screw
2. Fuel tank cap

2. Open the fuel tank cap slowly and release internal pressure completely.
   After that, close the fuel tank.
3. Connect the fuel connector to the engine and fuel tank.

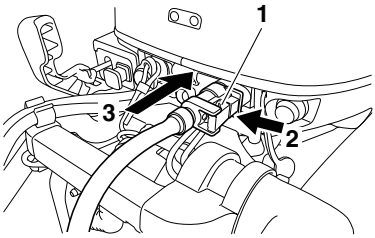

ENOF00514-0

1. Fuel connector
2. Push
3. Insert

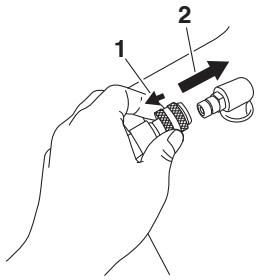

ENOF00861-A

1. Pull
2. Insert

4. Squeeze primer bulb until it becomes stiff to feed fuel to vapor separator. Direct arrow mark upward when priming.

ENOF00862-0

1. Engine side
2. Fuel tank side

Do not squeeze primer bulb with engine running or when the outboard motor is tilted up. Otherwise, fuel could overflow.

ENOM00045-C

2. Starting the engine

ENOW00036-A

⚠ CAUTION

When the engine is started in the test tank, to avoid over heating and water pump damage, be sure the water level is at least 10 cm (4 in.) above the anti ventilation plate.
And be sure to remove the propeller, when starting the engine in the test tank. (See page 71)
Run the engine only at idling.

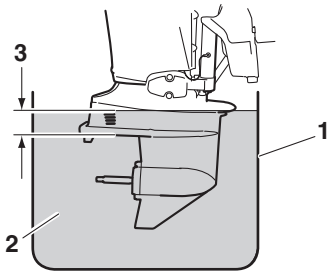

ENOF00863-0

1. Test tank
2. Water
3. Over 10 cm (4 in.)

ENOW00036-0

⚠ CAUTION

Be sure to stop engine immediately if cooling water check port is not discharging water, and check if cooling water intake is blocked. Operating engine could lead to overheating potentially leading to engine damage. Consult an authorized dealer if the cause cannot be found.

ENOW00032-A

⚠ CAUTION

Do not keep turning starter motor for over 5 seconds, or the battery may be consumed, potentially making the engine starting impossible and/or damaging the starter.
If cranking over 5 seconds fails to start engine, return main switch to “ON”, and crank engine again after 10 seconds or more.
Do not try to crank after engine has started.

This model is provided with start in gear protection.

ENON00010-0

Note

Start-in-gear protection prevents engine from starting at other than neutral shift. In-gear starting of engine will move the boat

immediately, potentially leading to falling down or causing passenger(s) to be thrown overboard.

Tiller handle type

1. Be sure to install the stop switch lock to the stop switch, and attach the stop switch lanyard securely to the operator or to the operator's PFD (Personal Flotation Device.)

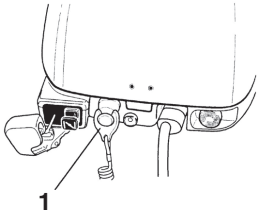

ENOF00516-0

1. Stop switch lock

2. Set the control lever in the Neutral position.

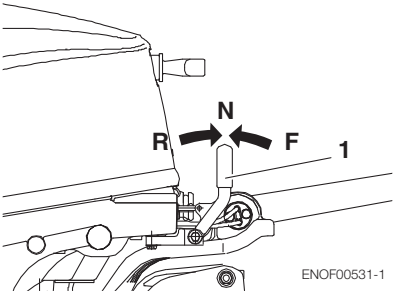

ENOF00531-1

1. Shift lever

3. Set the throttle grip to START position.

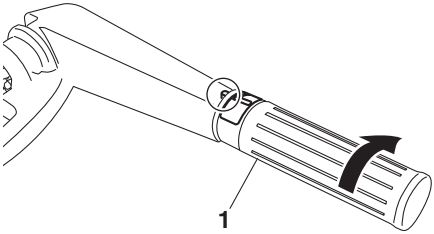

ENOF01107-0

1. Throttle grip

4. Set the control lever in the Neutral position.

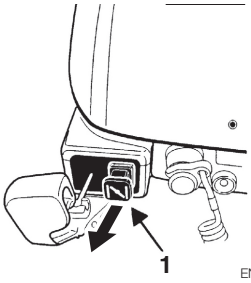

ENOF00518-0

1. Choke knob

5. Pull the choke knob fully.

ENON00501-0

Note

Choke is not necessary when the engine is warm. Set the throttle grip to “RE-START” position.

ENON00502-0

Note

If engine does not start with 4 or 5 times starting operation, push the knob back and restart.

(For manual starter type)

This engine is equipped with a compression release mechanism.

6. Pull the starter handle slowly until you feel engagement, keep pulling till you feel less resistance. Then pull it quickly. repeat if necessary until started.

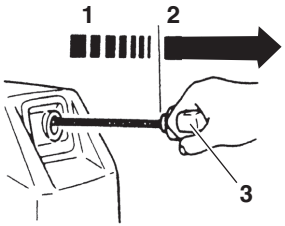

ENOF00519-0

1. Slowly
2. Quickly

(For electrical starter type)

4. Push the starter switch button and release the button when the engine has started.

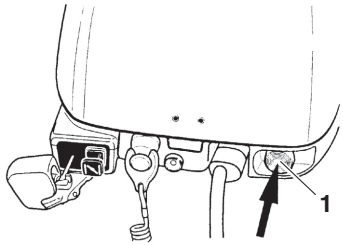

ENOF00520-0

1. Starter Button

ENOW00032-0

⚠ CAUTION

Do not keep turning starter motor for over 5 seconds, or the battery may be consumed, potentially making the engine starting impossible and/or damaging the starter.
If cranking over 5 seconds fails to start engine, return main switch to "ON", and crank engine again after 10 seconds or more.

5. Check the cooling water from cooling water check port.

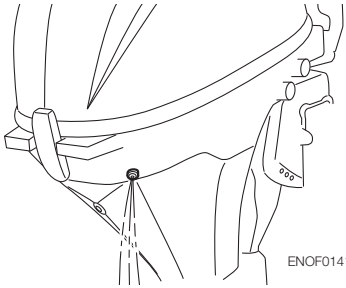

ENOF01411-1

Side mount RC type

1. Be sure to install the stop switch lock to the stop switch, and attach the stop switch lanyard securely to the operator or to the operator's PFD (Personal Flotation Device.)

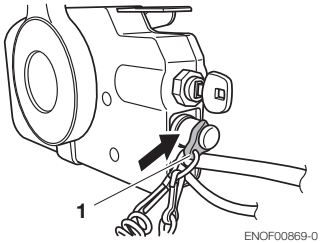

ENOF00869-0

1. Stop switch lock

2. Insert the main switch key.
3. Set the control lever in the Neutral position.
4. Raise the free accel lever a little (both of cold engine and warm engine).

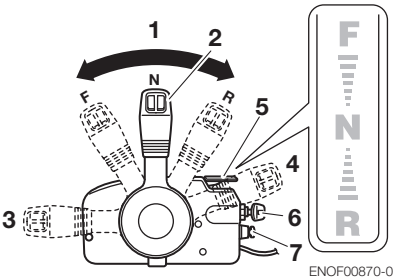

ENOF00870-0

1. Neutral (N)
2. Control lever
3. Fully open (Forward)
4. Fully open (Reverse)
5. Free throttle lever
6. Main switch key
7. Stop switch

ENON00035-A

Note

The free throttle lever can not be raised when the control lever shift is in Forward or Reverse.

5. Turn the main switch key to ON position. Then, continuously push the key to operate the choke.

ENON00503-0

Note

Choke operation is not necessary if the engine is warm.

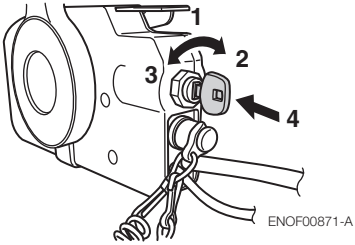

ENOF00871-A

1. ON
2. START
3. OFF
4. Push to operate choke knob.

6. Stop pushing the key when the engine has started.

The key returns to the original position, automatically.

7. Returns the Free accel lever to close position.
8. Confirm warning lamp light up and then go off after engine has started.

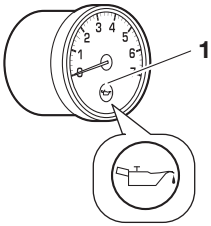

ENOF00851-A

1. Warning lamp

9. Check the cooling water from cooling water check port.

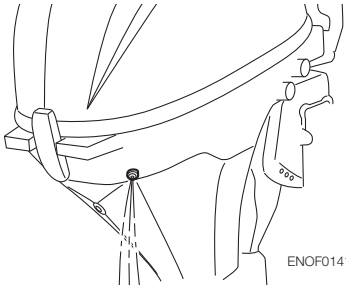
ENOF01411-1

ENOM00042-A

Emergency starting

ENOW00099-A

⚠ WARNING

When the emergency starter rope is used for starting engine;

- **Start in gear protection does not work. Be sure to shift is at neutral position. Otherwise the engine will move the boat immediately and cause personal injury.**
- **Be careful that your clothes or other items do not get caught in the rotating engine parts.**

- **To prevent accident and injury by rotating parts, do not re-attach flywheel cover and the top cowl after the engine has been started.**
- **Do not pull starter rope if any bystander is behind. The action can injure the bystander.**
- **Attach engine stop switch lanyard to clothing or any part of body like arm before starting engine.**

1. Remove the top cowl.

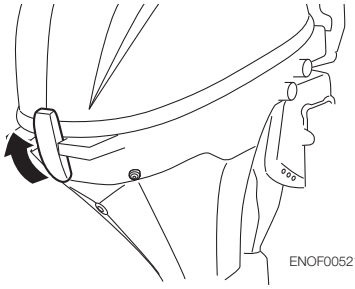
ENOF00521-1

2. Remove starter lock cable from recoil starter by loosening the screw for the starter lock cable.

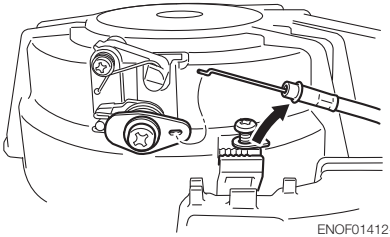
ENOF01412-0

3. Remove the bolts (3 pcs) and remove the recoil starter.

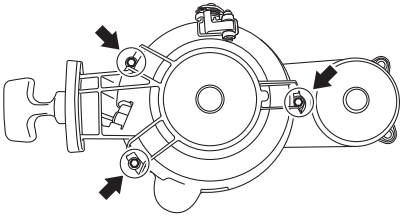
ENOF01434-0

4. Insert the knotted end of the starter rope into the notch in the flywheel and wind the rope around the flywheel several turns clockwise.

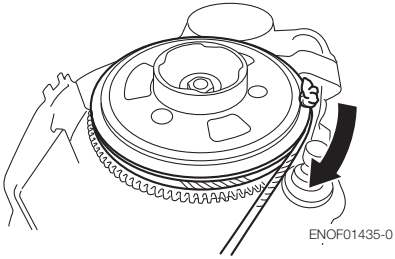
ENOF01435-0

5. Tie a loop in the another end of the emergency starter rope and attach socket wrench that is included in the tool kit.

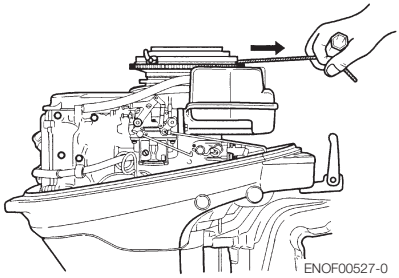
ENOF00527-0

ENOW00860-0

⚠ CAUTION

Be sure to keep the harness away from the rotation parts.

6. Be sure to install the stop switch lock to the stop switch, and attach the stop switch lanyard securely to the operator or to the operator's PFD (Personal Flotation Device.)

7. Set the control lever in the Neutral position.
8. Pull the starter handle slowly until you feel engagement, keep pulling till you feel less resistance. Then pull it quickly.
9. After engine starts, do not reinstall flywheel cover and top cowl.

ENOM00518-0

If the choke solenoid fails to operate (EP and EPT type only)

1. Remove the top cowl.
2. Close the choke plate by finger.
3. Raise the Free accel lever a little.
4. Turn the main switch key to start position.
5. Stop pushing the key when the engine has started.
6. Return the choke plate to open position.

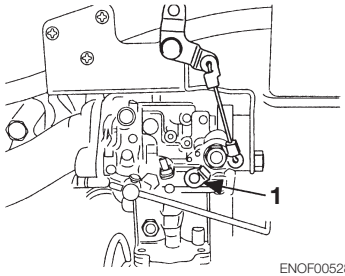

ENOF00528-0

1. Choke plate (open position)

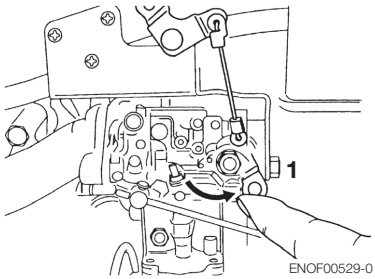

ENOF00529-0

1. Choke plate (closed position)

ENOM00043-A

3. Warming up the engine

ENOW00932-0

⚠ CAUTION

Be sure to check that cooling water is coming out of the cooling water check port during warm up.

Warm the engine at low engine speeds for about
3 minutes : above 5°C (41°F)
5 minutes at 2000 min^{-1} (rpm) : blow 5°C (41°F)
This allows the lubricating oil to circulate to all parts of the engine. Operating the engine without warm up shortens the engine's life.

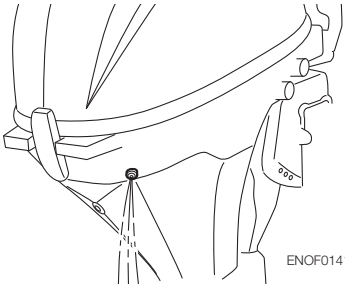

ENOF01411-1

ENOM00044-0

Engine speeds

Idling speed after warming up.

Remark: In case of cold engine starting, idling speed is increased about 400 min^{-1} (rpm) for several minutes.

Clutch in (In gear)	Clutch off (Out of gear)
900 min^{-1} (rpm)	950 min^{-1} (rpm)

ENOM00046-A

4. Forward, reverse, and acceleration

ENOW00037-0

⚠ WARNING

Before shifting into forward or reverse, make sure that boat is properly moored and outboard motor can be steered fully to the right and left. Make sure that no swimmer(s) is ahead or astern of the boat.

ENOW00038-A

⚠ WARNING

- **Attach other end of emergency stop switch lanyard to the operator's PFD (Personal Flotation device) or arm and keep it attached during cruising.**
- **Do not attach the tether to a part of clothing that can be torn easily when pulled.**
- **Arrange the tether so that will not be caught by any object when pulled.**
- **Be careful not to pull the tether accidentally during cruising. Unintentional stop of engine can cause loss of control of outboard motor. Rapid loss of engine power can lead to falling down or causing passenger(s) to be thrown overboard.**

ENOW00042-0

⚠ WARNING

- **Do not shift into Reverse during planing, or control will be lost leading to serious personal injury, boat may swamp, and/or hull may be damaged.**
- **Do not shift into Reverse during cruising, or control may be lost, falling down or causing passenger(s) to be thrown overboard. Leading to serious personal injury, and steering system and/or shifting mechanism may be damaged.**

ENOW00861-0

⚠ WARNING

Do not shift at high boat speed, or control may be lost, falling down or causing passenger(s) to be thrown overboard. Leading to serious personal injury.

ENOW00862-0

⚠ CAUTION

Gear and clutch damage may occur if shifting at high engine speed.
Engine must be in the slow idle position before shifting is attempted.

ENOW00863-0

⚠ CAUTION

Idle speed may be higher during warming up of engine. If shifted to Forward or Reverse during warming up, it may be difficult to shift back to neutral. In such case, stop engine, shift to neutral, and restart engine to warm up.

ENON00014-0

Note

Frequent shifting to forward or reverse can accelerate wear or degradation of parts. In such case, replace gear oil earlier than the period specified.

ENOW00864-0

⚠ CAUTION

Do not increase engine speed unnecessarily when the shift is in neutral and reverse, or engine damage may occur.

ENOM00890-A

Tiller handle type

ENOW00867-0

⚠ WARNING

Sudden acceleration and deceleration may cause passenger(s) to be thrown overboard or falling down.

ENOW00865-A

⚠ CAUTION

Do not force to shift when the throttle grip is not in the fully closed position, otherwise, steering system and/or shifting mechanism may be damaged.

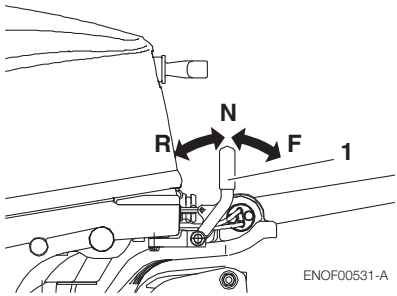

1. Shift lever

Forward

1. Turn the throttle grip to reduce engine speed.
2. When the engine reaches trolling (or idling) speed, quickly pull the shift lever to the Forward position.

Reverse

1. Turn the throttle grip to reduce engine speed.
2. When the engine reaches trolling (or idling) speed, quickly pull the shift lever to the Reverse position.

Acceleration

ENOW00867-0

⚠ WARNING

Sudden acceleration and deceleration may cause passenger(s) to be thrown overboard or falling down.

Open throttle grip or control lever gradually.

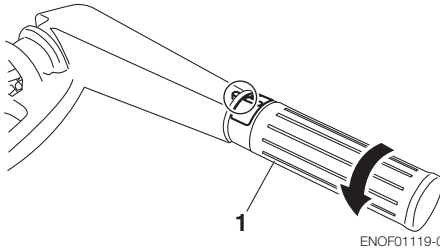

1. Throttle grip

ENOM0900-0

Side mount RC type

ENOW00867-0

⚠ WARNING

Sudden acceleration and deceleration may cause passenger(s) to be thrown overboard or falling down.

ENOW00865-A

⚠ CAUTION

Do not force to shift when the throttle grip is not in the fully closed position, otherwise, steering system and/or shifting mechanism may be damaged.

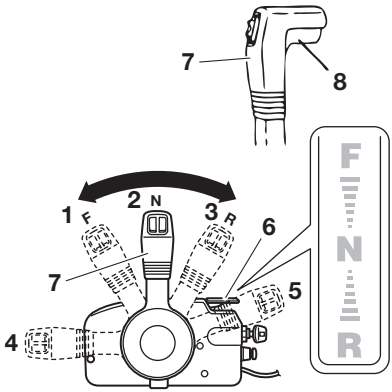

ENOF00877-0

1. Forward (F)
2. Neutral (N)
3. Reverse (R)
4. Fully open (Forward)
5. Fully open (Reverse)
6. Free throttle lever
7. Control lever
8. Lock button

Forward

1. Quickly push the control lever to the Forward (F) position 32°, where the gear is connected, while lifting up on the lock button located under the control lever grip.
2. Further forward motion will open the throttle.

Reverse

1. Quickly pull the control lever to the Reverse (R) position at 32°, where the gear is connected, while lifting up on the lock button located under the control lever grip.
2. Further rearward motion will open the throttle.

Acceleration

ENOW00867-A

⚠ CAUTION

Sudden acceleration and deceleration may cause passenger(s) to be thrown overboard or falling down.

Open throttle grip or control lever gradually.

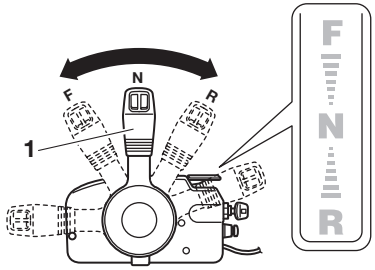

ENOF00879-0

1. Control lever

ENOM00049-A

5. Stopping the engine

ENOW00868-0

⚠ WARNING

Be careful not to remove engine stop switch lanyard from engine accidentally while boat is running. Sudden stop of engine can cause loss of steering control. It can also cause loss of boat speed, possibly leading the crew(s) and or objects on the boat to be thrown forward due to inertial force.

Tiller handle type

1. Turn the throttle grip to the slow position.

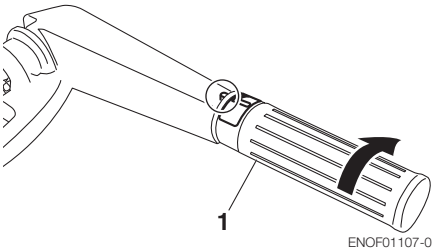

1. Throttle grip

2. Put the shift lever in the Neutral position.
   Run the engine for 2-3 minutes at idling speed for cooling down if it has been running at full speed.
3. Push the stop switch for a few seconds to stop the engine.

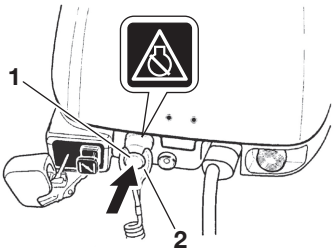

1. Stop Switch

Side mount RC type

1. Put the control lever in the Neutral position and run the engine for 2-3 minutes at idling speed for cooling down if it has been running at full speed.

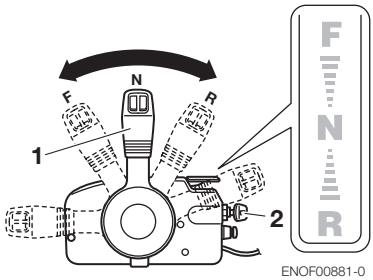

2. Turn the main switch key to the OFF position or push the stop switch. (Do not forget to turn the key off).

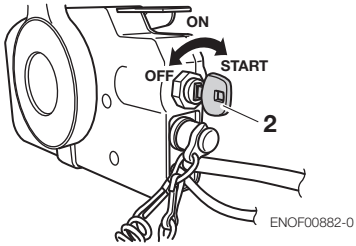

1. Control lever
2. Mine switch key

ENOW00869-0

⚠ WARNING

After stopping the engine:

- **Close the air vent screw on the fuel tank cap.**
- **Disconnect the fuel connector of the engine and the fuel tank.**
- **Disconnect the battery cord, after each use.**

Emergency engine stopping

Remove stop switch lock to stop the engine.

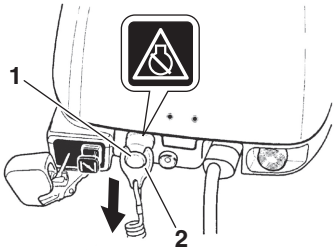

ENOF00569-C

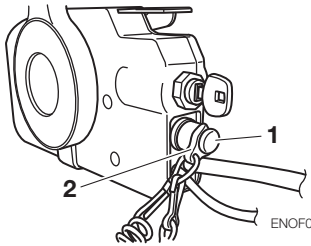

ENOF00884-0

1. Stop switch
2. Stop switch lock

ENOM00910-0

Spare emergency stop switch lock

A spare emergency stop switch lock is provided in the tool bag.

When used as described, the emergency stop switch clip and emergency stop switch lanyard system stops the engine if the operator falls away from the controls.

When an operator falls into water, be sure to use emergency stop switch lock of the spare.

Be sure to confirm the spare stop switch lock is in the tool bag before begin to operate.

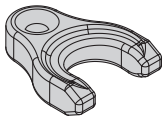

ENOF00891-0

ENOM00920-0

6. Steering

ENOW00870-0

⚠ WARNING

Sudden steering may cause passenger(s) to be thrown overboard or falling down.

Tiller handle type

Right turn

Move the tiller handle to the left

Left turn

Move the tiller handle to the right.

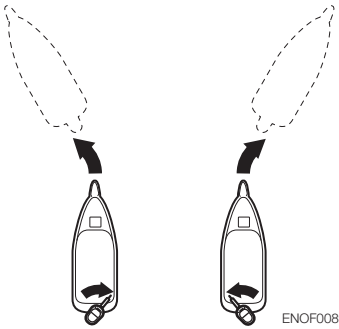

ENOF00892-0

Remote control type

Right turn

Turn the steering wheel to the right.

Left turn

Turn the steering wheel to the left.

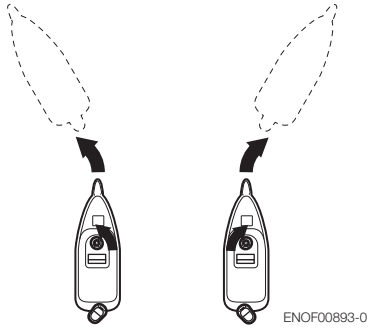

ENOM00050-0

7. Trim angle

ENOW00043-A

⚠ WARNING

- **Adjust the trim angle when the engine is stopped.**
- **Do not put hand or finger in between outboard motor body and clamp bracket when adjusting trim angle to prevent injury in case the outboard motor body falls.**
- **Unsuitable trim position can cause loss of control of boat. When testing a trim position, run boat slow initially to see if it can be controlled safely.**

ENOW00044-0

⚠ WARNING

Excessive trim up or down may lead to unstable boat operation, potentially causing the steering difficulty that leads to accident during cruising.

- **Do not cruise at high speed if improper trim position is suspected. Stop the boat and readjust trim angle before continuing cruise.**
- **For outboard motor model with PTT switch on the bottom cowl, do not operate the switch during cruising, or control of boat may be lost.**

The trim angle of the outboard motor can be adjusted to suit the transom angle of the hull, and load conditions. Choose an appropriate trim angle that will allow the anti-ventilation plate to run parallel to the water surface during operation.

ENOM00052-0

Proper trim angle

The position of the thrust rod is correct if the hull is horizontal during operation.

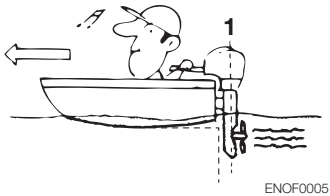

1. Perpendicular to the water surface

ENOM00053-A

Improper trim angle (bow rises too high)

Set the thrust rod (or priset knob) lower if the bow of the boat rises above horizontal.

ENOM00054-0

Improper trim angle (bow dips into the water)

Set the thrust rod (or priset knob) higher if the bow of the boat is below horizontal.

ENOF00053-0

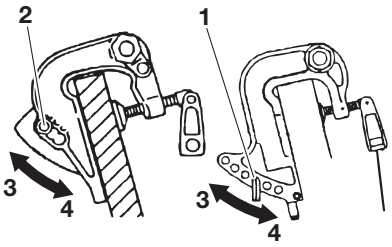

ENOF00532-0

1. Thrust rod
2. Preset knob
3. Higher
4. Lower

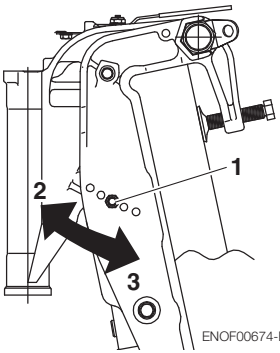

ENOF00674-B

1. Thrust rod
2. Higher
3. Lower

Remark: Thrust rod is for MF and EF, and preset knob is for EP.

Trim angle adjustment (Manual tilt MF, EF type)

The transom angle adjustment

1. Stop the engine.
2. Shift into neutral.
3. Raise the outboard motor to the tilt up position.
4. Change the thrust rod position as following picture.

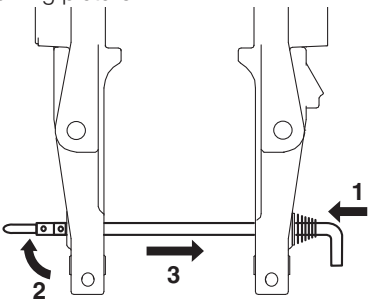

ENOF01238-1

1. Push in
2. Rise the stopper
3. Pull out

5. Reinstall the thurst rod securely.
6. Gentry lower the outboard.

Trim angle adjustment (Manual tilt RC type)

The transom angle adjustment

1. Stop the engine
2. Shift into forward.
3. Raise the outboard motor to the tilt up position.

4. Change the trim lock pin position as following picture.

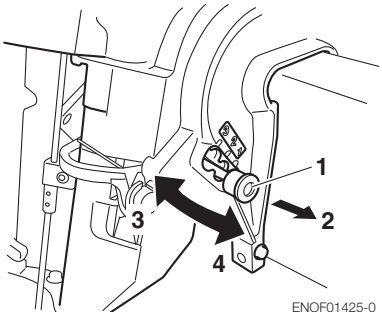

1. Preset knob
2. Pull
3. Higher
4. Lower

5. Reinstall preset knob securely.
6. Gentry lower the outboard.

Trim angle adjustment (Power tilt type)

The transom angle adjustment

1. Stop the engine
2. Operate the Power Tilt switch and raise the outboard motor to the tilt up position.
3. Lock the tilt with the Tilt stopper.
4. Change the trim lock pin position as following picture.

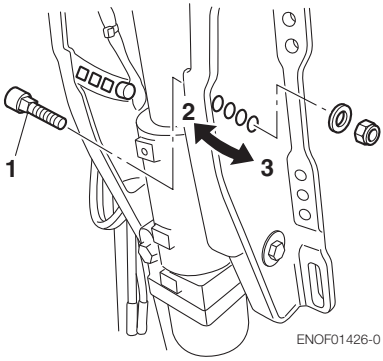

1. Trim lock pin
2. Higher
3. Lower

5. Reinstall the tilt lock pin securely.
6. Operate the Power Tilt switch and lower the outboard.

ENOM00060-A

8. Tilt up and down

ENOW00055-0

⚠ WARNING

Do not tilt up or down outboard motor when swimmer(s) or passenger is near to prevent them from being caught between outboard motor body and clamp bracket in case the outboard motor body falls.

ENOW00048-0

⚠ WARNING

When tilting up or down, be careful not to place your hand between the swivel bracket and the stern bracket.
Be sure to tilt the outboard motor down slowly.

ENOW00056-A

⚠ WARNING

When tilting up outboard motor with fuel joint for over a few minutes, be sure to disconnect fuel hose, or fuel may leak, potentially catching fire.

ENOW00057-0

⚠ CAUTION

Do not tilt up outboard motor while engine operates, or no cooling water may be fed, leading to engine seizure due to overheating.

ENON00921-0

Note

Before tilting the outboard motor up, after stopping the motor leave it in the running position for about a minute to allow water to drain from inside the engine.

ENOM00062-A

Manual Tilt type

Tilt up

With the shift lever in Neutral or Forward, fully tilt the motor up toward you by holding the tilt handle provide at the rear of the top cowl. Then slightly lower the motor for locking in the up position.

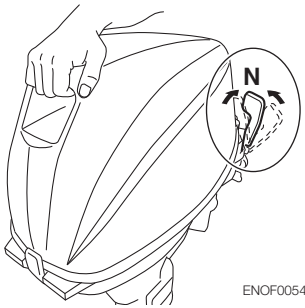

ENOF00543-1

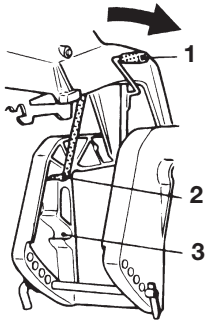

ENOF00544-0

1. Tilt lever
2. Tilt up position
3. Shalow water operating position

ENOM00063-A

Tilt down

Slightly tilt the motor up, and pull the tilt lever toward you to release the tilt-lock. Then lower the motor slowly.

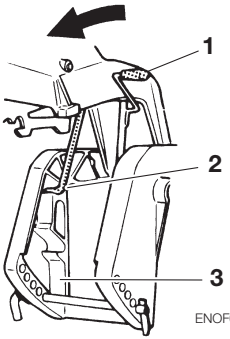

ENOF00545-1

1. Tilt lever
2. Tilt up position
3. Tilt down position

ENOM00564-0

Manual Tilt RC type

Tilt up

1. Put the control lever to the Forward (F) position.

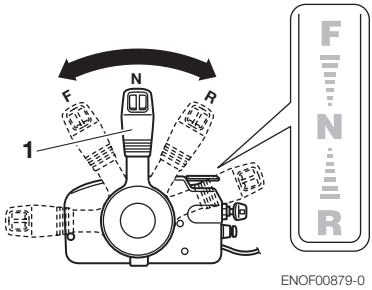

ENOF00879-0

1. Control lever

2. Tilt the outboard motor all the way up until it is in tilted - up position.

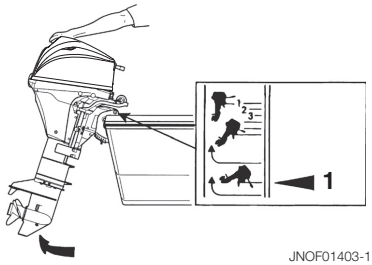

1. Tilt up position

3. Set the knob to Lock position, then secure the tilt locking.

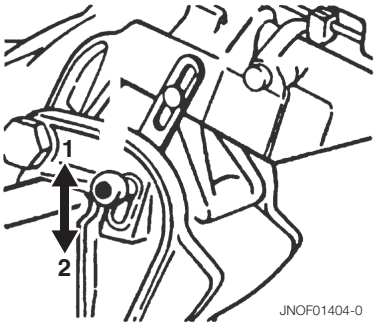

1. LOCK
2. UN-LOCK

Tilt down

1. Set the knob to Unlock position.

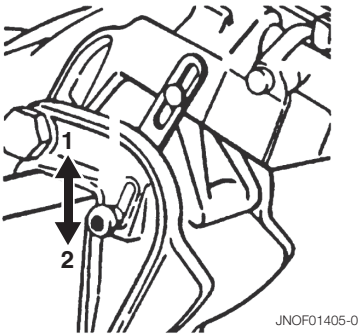

1. LOCK
2. UN-LOCK

2. Lift up the outboard motor slightly until it is in Release position, and then outboard motor tilted down.

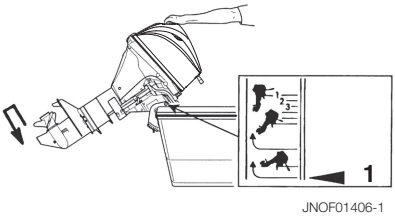

1. Tilt release position

ENOM00069-B

Power Tilt type

Tilt up

1. Operate the Power Tilt switch and tilt the outboard motor up.
2. Lock the tilt with the Tilt stopper after the outboard motor has been tilted up

Tilt down

1. Release the tilt stopper from the set-up position while slightly tilting up outboard motor.
2. Operate the Power Tilt switch and tilt the outboard motor down until the motor touches to the thrust rod.

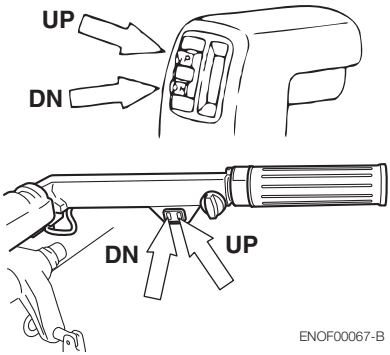

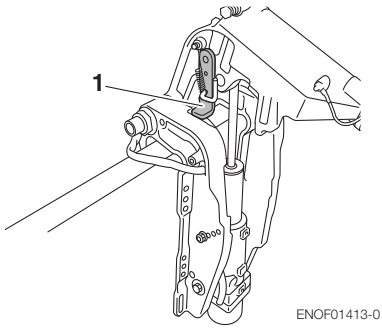

1. Tilt stopper

The outboard motor can also be tilted up and down using the switch provided on the bottom cowl.

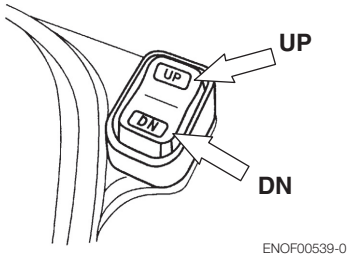

It is possible to tilt up or down in spite of main switch “ON” or “OFF”.

ENOM00940-0

Manual relief valve

If the battery is dead, and the power tilt switch thus inoperative, open the manual valve completely in the Manual direction. This will allow manual tilting of the outboard motor.

ENOW00872-0

⚠ WARNING

Make sure the manual relief valve is closed before operating the outboard motor. If the manual relief valve is not closed, the outboard motor will tilt up when operated in reverse.

ENOW00873-0

⚠ WARNING

Before opening the manual relief valve, make sure nobody is under the outboard motor. If the outboard motor is in the tilted up position, it will tilt down suddenly if the manual relief valve is loosened in the "Manual" direction.

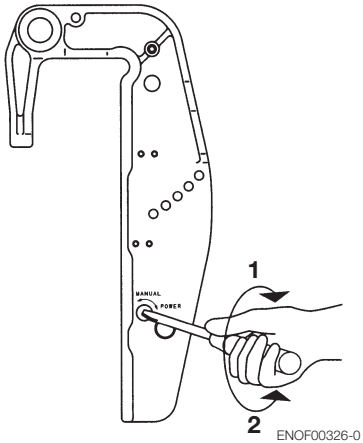

1. Power
2. Manual

ENOM00068-A

9. Shallow water operation

ENOW00051-0

⚠ WARNING

During shallow water operation, be careful not to place your hand between the swivel bracket and the clamp bracket. Be sure to tilt the outboard motor down slowly.

ENOW00053-0

⚠ CAUTION

While in shallow water drive position, do not operate the outboard motor in Reverse. Operate the outboard motor at slow speed and keep the cooling water intake submerged.

ENOW00054-A

⚠ CAUTION

Do not overtilt outboard motor when driving shallow water, or air may be sucked through water inlet, potentially leading to engine overheating.

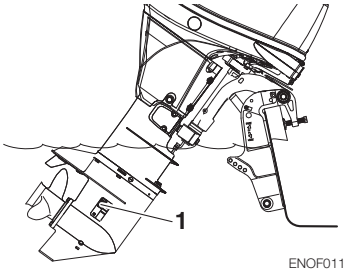

ENOF01144-A

1. Water inlet

Manual tilt type (MF, EF type)

Shallow water running position:

1. With the shift lever in Neutral or Forward, tilt the motor up slowly by about 40° and then lower the tilt lever for setting at the shallow water running position.

Return to normal running position:

2. Tilt the motor up fully and then return the motor down slowly to the normal running position.

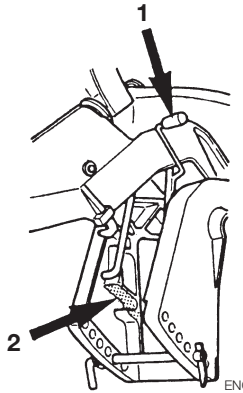

ENOF00549-0

1. Tilt lever
2. Shallow water running position

ENOM00541-A

Manual tilt type (EP type) Shallow water running position

1. Stop the engine.
2. Shift the outboard into forward.
3. Tilt the outboard up to one of the shallow water positions.

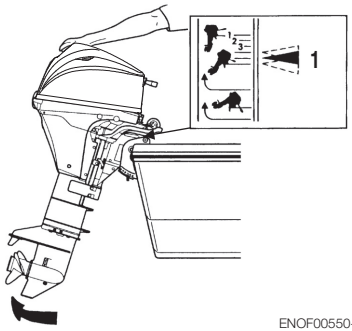

ENOF00550-1

1. Shallow water drive position

Return to normal running position

1. Stop the engine.
2. Tilt the outboard up to the tilt release position.

3. Gently lower the outboard.

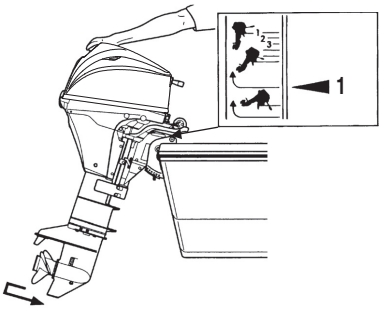

ENOF00551-1

1. Tilt release position

ENOM00069-A

Power Tilt type

1. Operate the Power Tilt switch and tilt the outboard motor up into desired shallow water running position.

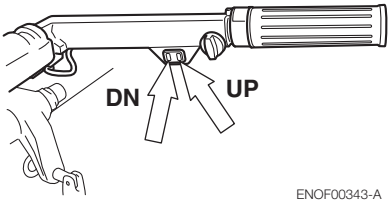

ENOF00343-A

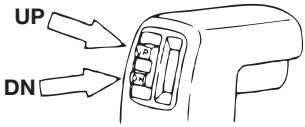

ENOF00067-0

REMOVING AND CARRYING THE OUTBOARD MOTOR

ENOM00070-C

1. Removing the outboard motor

ENOW00064-0

⚠ CAUTION

Engine may be hot immediately after operating and could cause burns if touched. Allow engine to cool down before attempting to carry the outboard.

1. Stop the engine.
2. Disconnect the fuel connector, the remote control cables and the battery cords from the outboard motor.
3. Remove the outboard motor from boat and completely drain the water from the gear case.

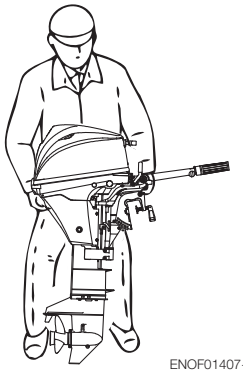

ENOF01407-1

ENOM00071-A

2. Carrying the outboard motor

ENOW00933-0

⚠ WARNING

Be sure to disconnect fuel connector except when operating engine.

Fuel leakage is a fire or explosion hazard, which can cause serious injury or death.

ENOW00065-0

⚠ WARNING

Close air vent screw of fuel tank before carrying or storing outboard motor and fuel tank, or fuel may leak, potentially catching fire.

ENOW00066-0

⚠ CAUTION

- **Do not give a shock to an outboard motor during transportation. It becames a cause of breakage.**
- **Do not carry or store outboard motor in any of positions described below. Otherwise, engine damage or property damage could result from leaking oil.**

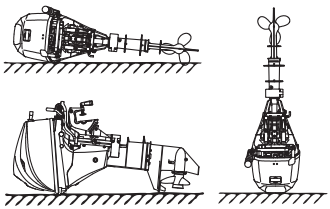

ENOF01414-1

Keep the outboard motor in a vertical position when carrying.
The optional outboard motor stand is recommended for keeping the outboard motor vertical both during transport and storage.

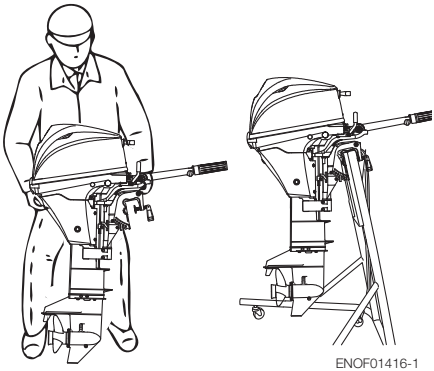

ENOF01416-1

ENON00021-A

Note

- If the outboard motor must be laid down be sure drain the fuel and engine oil, then the port side faces down as shown in the drawing above.
- Elevate power unit 2 inches to 4 inches if traveling to avoid oil spillage.

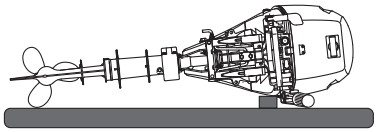

ENOF01415-0

ENOM00072-A

3. Traillering

ENOW00072-0

⚠ CAUTION

Trailering in the tilted position may cause damage to the outboard motor, boat, etc.

ENOW00073-A

⚠ WARNING

Be sure to disconnect fuel connector except when operating engine.

Fuel leakage is a fire or explosion hazard, which can cause serious injury or death.

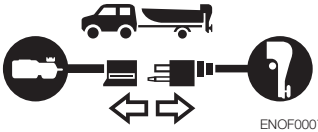

ENOF00075-1

ENOW00068-0

⚠ WARNING

Close air vent screw of fuel tank and fuel cock before carrying or storing outboard motor and fuel tank, or fuel may leak, potentially catching fire.

ENOW00071-0

⚠ CAUTION

The tilt support device supplied on your outboard motor is not intended for towing. It is intended to support the outboard motor while the boat is docked, beached, etc.

When transporting a boat on a trailer with the outboard motor still attached, disconnect the fuel line from the outboard motor beforehand and keep the outboard motor in the normal running position or on a transom saver bar.

Tiller handle type

To prevent the outboard motor from moving when it is attached on a boat during transport on a trailer, properly tighten the steering friction lever (page 58).

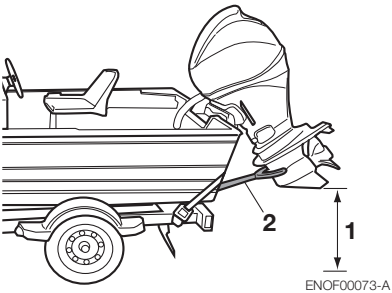

1. Ground clearance should be provided sufficiently.
2. Transom saver bar

ENOW00067-0

⚠ WARNING

Do not go under outboard motor tilted up even if it is supported by support bar, or accidental fall of outboard motor could lead to severe personal injury.

ADJUSTMENT

ENOM00073-0

1. Steering friction

Tiller handle type

ENOW00074-B

⚠ WARNING

Do not overtighten the steering friction lever it could result in difficulty of movement resulting in the loss of control causing an accident and could lead to severe injury.

Adjust this lever to achieve the desired steering friction (drag) on the tiller handle. Move lever towards (2) to decrease friction and move lever towards (3) to increase friction.

EF, MF type

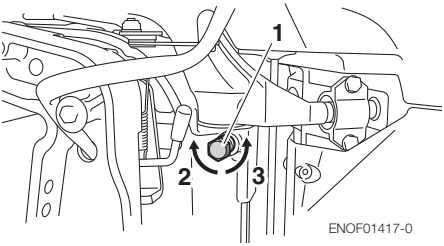

ENOF01417-0

1. Steering friction lever
2. Increase
3. Decrease

EFT type

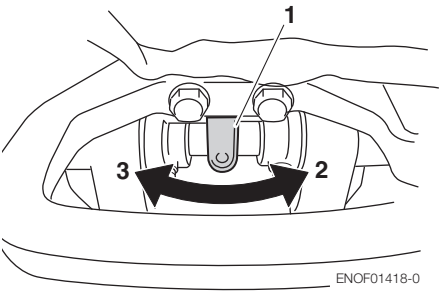

ENOF01418-0

1. Steering friction lever
2. Decrease
3. Increase

EENOM00074-A

2. Throttle grip friction

ENOW00074-B

⚠ WARNING

Do not overtighten the throttle adjustment screw or it could result in difficulty of movement resulting in the loss of control causing an accident and could lead to severe injury.

Friction adjustment of the throttle grip can be made with the throttle adjustment screw.

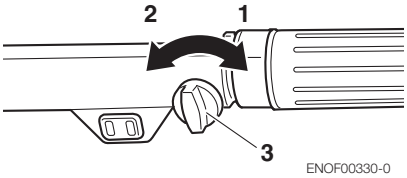

ENOF00330-0

1. Increase
2. Decrease
3. Throttle friction adjustment screw

ENOM00075-0

3. Remote control lever friction

EP, EPT type

ENOW00074-C

⚠ WARNING

Do not overtighten the remote control throttle friction adjustment screw or it could result in difficulty of movement resulting in the loss of control causing an accident and could lead to severe injury.

To adjust the friction of the remote control lever, turn the throttle friction adjustment screw on the front of the remote control. Turn clockwise to increase the friction and counter-clockwise to decrease it.

Side mount type

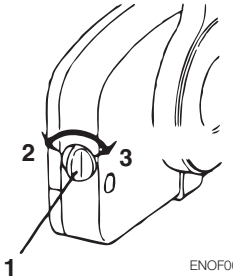

1. Throttle friction adjustment screw
2. Decrease
3. Increase

ENOM00076-0

4. Trim tab adjustment

ENOW00076-0

⚠ WARNING

- **Be sure that outboard motor is secured to transom or service stand, or accidental drop or fall of outboard motor could lead to severe personal injury.**
- **Be sure to lock outboard motor if it is tilted up, or accidental fall of outboard motor could lead to severe personal injury.**
- **Do not go under outboard motor tilted up and locked, or accidental fall of outboard motor could lead to severe personal injury.**

ENOW00075-0

⚠ WARNING

Inappropriate adjustment of trim tab could cause steering difficulty. After installing or readjusting trim tab, check if steering fiction is even.

If straight-line cruising can not be achieved, adjust the trim tab located under the anti-ventilation plate.

- If the boat veers toward the left direct the trim tab towards A (left from rear of boat).
- If the boat veers toward the right direct the trim tab towards B (right from rear of boat).

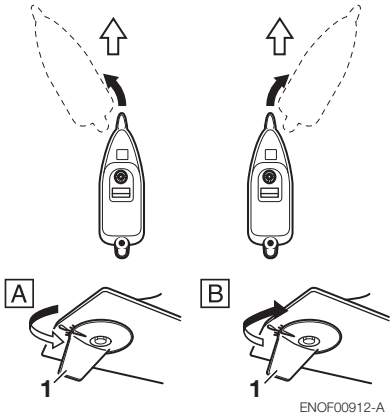

1. Trim tab

ENON00022-A

Notes

- After adjustment securely tighten the trim tab fixing bolt.
- Check for looseness of the bolt and the trim tab at regular intervals.

INSPECTION AND MAINTENANCE

ENOM00077-0

Care of your outboard motor

To keep your outboard motor in the best operating condition, it is very important that you perform daily and periodic maintenance as suggested in the maintenance schedules that follow.

ENOW00077-0

⚠ CAUTION

- **Your personal safety and that of your passengers depends on how well you maintain your outboard motor. Carefully observe all of the inspection and maintenance procedures described in this section.**
- **The maintenance intervals shown in the checklist apply to an outboard motor in normal use. If you use your outboard motor under severe conditions such as frequent full-throttle operation, frequent operation in brackish water, or for commercial use, maintenance should be performed at shorter intervals. If in doubt, consult your dealer for advice.**
- **We strongly recommend that you use only genuine replacement parts on your outboard motor. Damage to your outboard motor arising from the use of other than genuine parts is not covered under the warranty.**

ENOM00551-0

1. Daily Inspection

Perform the following checks before and after use.

ENOW00078-0

⚠ WARNING

Do not use outboard motor if any abnormality is found during pre-operation check or it could result in severe damage to the motor or severe personal injury.

Item	Points to Check	Remedy
Fuel System	• Check the amount of fuel in the tank. • Check for debris or water in the fuel filters. • Check the rubber hoses for fuel leakage.	Replenish Clean or Replace Replace
Fuel Tank Cap	• Check for crack, leakage, damage in the fuel tank cap. • Check for crack, damage in the gasket and tether. • Check for leakage at full close. • Check for ratchet performance.	Replace Replace Replace Replace
Engine Oil	• Check the oil level.	Fill to the upper level mark on dipstick
Electrical Equipment	• Check that the main switch functions normally. • Check that the battery electrolyte level and specific gravity are normal. • Check for loose connections on the battery terminal. • Check that the stop switch functions normally and make sure the lock plate is there. • Check cords for loose connections and damage. • Check the spark plugs for dirt, wear and carbon build-up.	Replace Replenish or recharge Retighten Remedy or replace Correct or replace Clean or replace
Throttle System	• Check carburetor linkage is working normally when turning the throttle grip.	Correct
Recoil Starter	• Check the rope for wear and chafing. • Check the ratchet engagement.	Replace Correct or replace
Clutch and Propeller System	• Check that clutch engages correctly when operating the shift lever. • Visually Check propeller for bent or damaged blades. • Check the propeller nut is tightened and the split pin is present.	Adjust Replace
Installation of Motor	• Check all the bolts attaching the motor to the boat. • Check the thrust rod installation.	Tighten
Cooling Water	• Check that cooling water is discharged from the cooling water check port after the engine has started.	Repair
Tools and Spares	• Check that there are tools and spare parts for replacing spark plugs, the propeller, etc. • Check that you have the spare rope.	
Steering Devices	• Check the operation of the steering handle.	Repair
Other parts	• Check if the anode is securely installed. • Check the anode for corrosion and deformation.	Repair if necessary Replace

ENOM00081-A

Oil level checking

If the oil level is low, or too high, the life of the engine will be shortened significantly.

1. Stop the engine and set it in a vertical position.
2. Remove the top cowl.
3. Remove the dipstick after 5 minutes engine has stopped.
4. Wipe oil off the oil dipstick with a clean rag.
5. Put in the dipstick.
6. Take out the dipstick and check the oil level.
7. Return the dipstick.

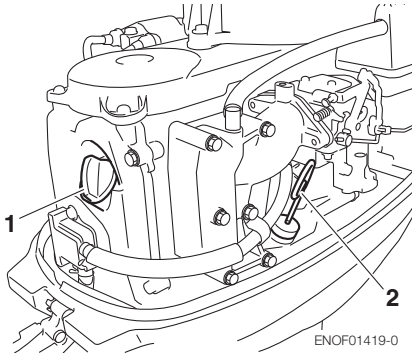

1. Filler cap
2. Dipstick

1. Upper level 800 mL
2. Lower level 600 mL

ENON00024-0

Note

The oil level should be checked when the engine is cold.

ENON00025-0

Note

Consult with an authorized dealer if the engine oil is milky color, or appears contaminated.

ENOM00082-A

Engine oil replenishing

ENOW00079-A

⚠ CAUTION

- **Do not add engine oil of brand and grade other than existing one. In case engine oil of other brand or grade is added, drain all oil and ask dealer for treatment.**
- **In case other than engine oil such as gasoline is put in the oil chamber, empty the chamber and ask dealer for treatment.**
- **When replenishing engine oil, be careful not to allow entry of foreign matters such as dust and water into oil chamber.**
- **Wipe off engine oil well immediately if spilled and dispose of it in accordance with local fire prevention and environment protection regulations.**
- **Do not replenish engine oil over upper limit. If overfilled, remove oil to upper limit. If engine oil is over the upper limit, it can leak potentially leading to engine damage.**

If the oil level is low, or at lowest mark, add recommended oil to the middle dipstick mark.

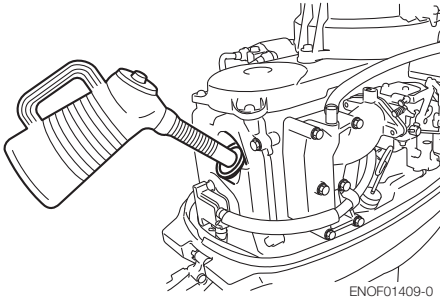

ENOM00083-0

Washing outboard motor

ENOW00081-0

⚠ WARNING

Do not start engine without removing propeller, or accidentally turning propeller could cause personal injury.

ENOW00082-0

⚠ WARNING

Never start or operate the engine indoors or in any space which is not well ventilated. Exhaust gas contains carbon monoxide, a colorless and odorless gas which can be fatal if inhaled for any length of time.

ENOW00920-0

⚠ CAUTION

When washing the outboard motor, be careful not to spray the water inside of the top cowl, especially electrical components.

ENON00026-0

Note

It is recommended to check chemical properties of water on which your outboard motor is regularly used.

If outboard motor is used in salt water, brackish water or water with a high acidic level, use fresh water to remove salt, chemicals or mud from exterior and cooling water passage after every cruising or before storing outboard motor for long time. Before flushing, remove the propeller and the forward thrust holder.

ENOM00085-A

Flushing attachment

ENOW00922-0

⚠ CAUTION

To prevent the engine from starting when you are near the propeller, remove the stop switch lock.

1. Tilt down the outboard motor.
2. Remove the water plug from the gear case, and screw in the flushing attachment.
3. Connect a water hose. Turn on the water and adjust the flow (Be sure to seal the water inlet, located in the gear case with tape).
4. Put the shift lever in the neutral position and start the engine.
   Continue flushing the outboard motor for 3 to 5 minutes at idling.
5. Stop the engine and water supply. Remove the flushing attachment and tape. After the flushing, be sure to reattach the water plug.

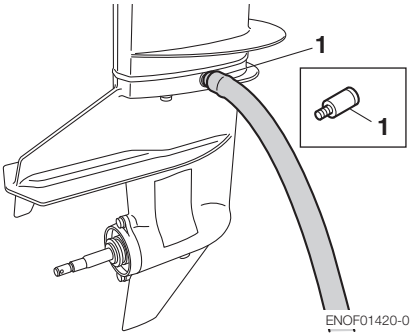

1. Flushing attachment (option)

ENOM00085-A

Flushing by test tank

ENOW00081-0

⚠ WARNING

Do not start engine without removing propeller, or accidentally turning propeller could cause personal injury.

ENOW00082-0

⚠ WARNING

Never start or operate the engine indoors or in any space which is not well ventilated. Exhaust gas contains carbon monoxide, a colorless and odorless gas which can be fatal if inhaled for any length of time.

ENOW00036-A

⚠ CAUTION

When the engine is started in the test tank, to avoid over heating and water pump damage, be sure the water level is at least 10 cm (4 in.) above the anti ventilation plate.
And be sure to remove the propeller, when starting the engine in the test tank. (See page 71)
Run the engine only at idling.

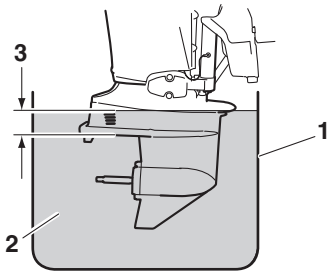

1. Test tank
2. Water
3. Over 10 cm (4 in.)

ENOM00950-0

Fuse replacement (For electrical sytarter type)

ENOW00923-0

⚠ CAUTION

Before replacing a fuse, disconnect the battery cable from the battery negative (-) terminal. Failure to do so may cause a short-circuit.

ENOW00924-0

⚠ CAUTION

Never use a fuse with a rating that exceeds the specified rating as this could cause serious damage to the electrical system.

If a blown fuse is detected, try to determine the cause for this and correct it. If the cause for the problem is not corrected, the fuse will likely blow again.
If the fuse continues to blow, request an authorized Tohatsu dealer to inspect the outboard motor.

1. Stop the engine and disconnect the battery cable from the battery negative (-) terminal.
2. Remove the engine cover.
3. Remove the fuse box lid.
4. Remove the fuse and check it. If the fuse is blown, replace it with a fuse of the same specified rating. The outboard motor is supplied with spare fuses in the spare fuse holder.

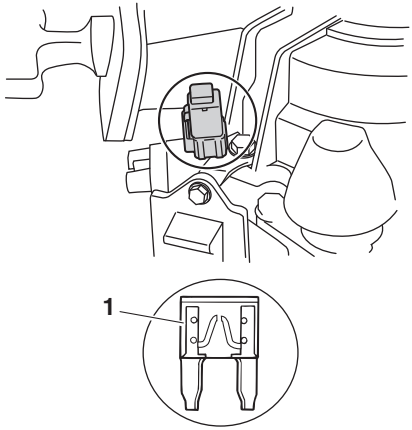

ENOF01421-0

1. Blown fuse

ENOM00555-0

2. Periodic Inspection

It is important to inspect and maintain your outboard motor regularly. At each interval on the chart below, be sure to perform the indicated servicing.
Maintenance intervals should be determined according to the number of hours or number of months, whichever comes first.

Description		Inspection intervals				Inspection procedure	Remarks
		First 20 hours of 1 month	Every 50 hours of 3 months	Every 100 hours of 6 months	Every 200 hours of 1 year		
Fuel System	Carburetor*1			●	●	Strip, Clean, and adjust.	
	Fuel filter	●	●	●	●	Check and clean or Replace if necessary.	
	Piping/Hoses	●	●	●	●	Check and Replace if necessary.	
	Fuel tank	●		●	●	Check and Replace if necessary.	
	Fuel tank cap	●	●	●	●	Check and Replace if necessary.	
	Fuel pump*1	●	●	●	●	Check and Replace if necessary. Disassemble and check each 300 hours.	
Ignition	Spark plug	●		●	●	Check gaps. Remove carbon deposits or Replace.	0.8–0.9 mm (0.031–0.035 in)
	Ignition timing*1	●		●	●	Check timing.	
Starting System	Starter rope	●	●	●	●	Check for wear or chafing	
	Starter Motor*1			●	●	Check for salt deposits and the battery cable condition.	
	Battery	●	●	●	●	Check installation, fluid quantity, gravity.	
Engine	Engine oil	Replace ●		Replace ●	Replace ●	Replace if necessary.	
	Valve Clearance*1	●		●	●	Check & adjust.	IN: 0.13–0.17 mm (0.0051–0.0067 in) EX: 0.18–0.22 mm (0.0071–0.0087 in)
	Timing Belt*1			●	●	Check and Replace if necessary.	
	Thermostat*1			●	●	Check and Replace if necessary.	
Lower Unit	Propeller	●	●	●	●	Check for bent blades, damage, wear.	
	Gear oil	Replace ●	●	Replace ●	Replace ●	Change or replenish-oil and check for water leaks.	320 mL (10.8 fl.oz.)
	Water pump*1		●	●	●	Check for wear or damage.	Replace impeller every 12 months.
Bolts and Nuts		●	●	●	●	Retighten	
Sliding and Rotating Parts. Grease Nipples		●	●	●	●	Apply and pump in grease.	
Outer Equipment		●	●	●	●	Check for corrosion.	
Anode			●	●	●	Check for corrosion and deformation.	Replace if necessary.

*1: Have this handled by your dealer.

ENON00030-0

Note

Your outboard motor should receive careful, and complete inspection at 300 hours. This is the best time for major maintenance procedures to be carried out.

ENOM00091-A

Engine oil replacement

ENOW00091-0

⚠ CAUTION

You may be injured due to high engine temperatures if you fill engine oil just after stopping. Changing engine oil should be done after the engine has been cooled.

ENOW00092-A

⚠ CAUTION

- **Do not overfill engine oil, or engine oil could leak and/or engine could be damaged. If engine oil level is over upper limit marks of oil gauge, drain oil to level lower than upper limit.**
- **Be sure that outboard motor is in upright and level position when checking or changing oil.**
- **Stop engine immediately if low oil pressure warning lamp is lit or oil leak is found, or engine could be severely damaged. Consult dealer.**
- **Wipe off engine oil well immediately if spilled and dispose of it in accordance with local fire prevention and environment protection regulations.**

ENOW00090-0

⚠ CAUTION

Use of engine oils that do not meet these requirements will result in reduced engine life, and other engine problems.

ENOW00933-0

⚠ CAUTION

Engine oil mixed with dust or water will dramatically shorten the life of the engine.

To change engine oil:

Be sure to use recommended engine oil (see page 13).

1. Stop the engine and allow it to cool.
2. Tilt up the outboard motor and lock the tilt with the tilt stopper.
3. Turn the steering on the outboard motor so that the drain hole is facing downward.
4. Put a oil drain pan under the oil drain screw.
5. Remove the oil drain screw and completely drain oil from the engine.

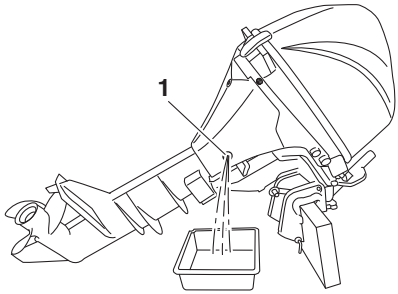

ENOF01422-1

1. Drain hole

6. Tighten the oil drain screw with applying oil on the sealing surface of screw. (Use new oil drain washer)

Oil drain screw specified torque

24N·m (17 ft·lb, 2.4 kgf·m)

ENON00028-A

Note

If a torque-wrench is not available when you are fitting a oil filter, a good estimate of the correct torque is 3/4 to 1 a turn past finger-tight. Have the oil filter adjusted to the correct torque as soon as possible with a torque-wrench.

7. Reset the engine in a vertical position.
8. Repeat 3 to 7 procedures two or three times to drain the oil completely.
9. Remove the top cowl and the oil filler cap.
10. Fill the engine through filler port with recommended oil (see chart below) to the middle of dipstick mark.
11. Tighten the oil filler cap.

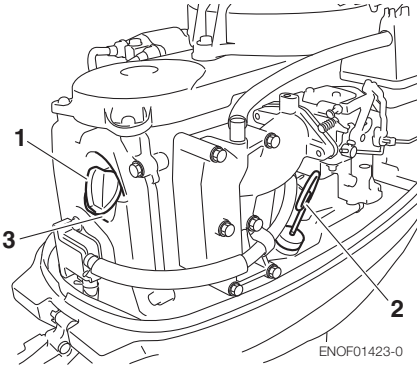

1. Filler cap
2. Dipstick
3. Filler port

1. Upper limit (Max.)
2. Lower limit (Min.)

ENON00920-0

Note

Use only recommended engine oil (See page 13)

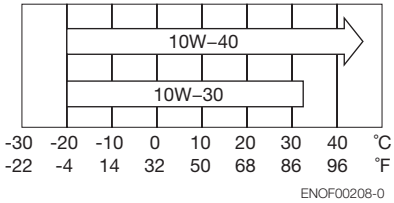

Oil volume needed for complete oil replacement	
With oil filter replacement	Without oil filter replacement
800 mL(27 fl.oz.)	

ENOW00925-0

⚠ CAUTION

Wipe off engine oil well immediately if spilled and dispose of it in accordance with local fire prevention and environment protection regulations.

ENON00031-0

Note

- If any amount of water is found in engine oil, making it milky white, consult dealer.

- If engine oil is contaminated with fuel, emitting strong fuel smell, consult dealer.
- Some oil dilution is normal if engine is idled or trolled for long periods, especially in cooler water temperatures.

ENOM00093-A

Fuel filters and fuel tank cleaning

ENOW00093-A

⚠ WARNING

Gasoline and its vapors are very flammable and can be explosive.

- **Do not start this procedure while engine is operating or hot even after stopping it.**
- **Place fuel filter away from every source of ignition such as sparks or open flames.**
- **Wipe off gasoline well immediately if spilled and dispose of it in accordance with local fire prevention and environment protection regulations.**
- **Install fuel filter with all related parts in place, or fuel leak could occur, leading to catching fire or explosion.**
- **Check fuel system regularly for leakage.**
- **Contact authorized dealer for fuel system services. Services by unqualified person could lead to engine damage.**

Fuel filters are provided inside the fuel tank and engine.

ENOM00094-0

Fuel filter (for engine)

1. Replace the fuel filter provided inside of engine cover if there is water or dirt inside.

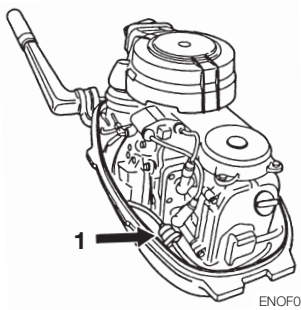

ENOF00560-0

1. Fuel filter

ENOM00096-A

Fuel filter (for fuel tank)

Water or dirt in the fuel tank will cause engine performance problems.

Check and clean the tank at specified times or after the outboard motor has been stored for a long period of time (over three months).

1. Remove the fuel pickup elbow of the fuel tank by turning it counterclockwise
2. Clean the fuel filter and check the O-ring. Replace it if necessary.
3. Reassemble all parts.

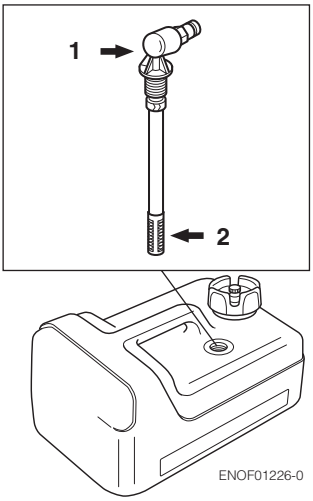

1. Fuel pick up
2. Filter

ENOM00098-A

Gear oil replacement

ENOW00094-0

⚠ WARNING

- **Be sure that outboard motor is secured to transom or service stand, or accidental drop or fall of outboard motor could lead to severe personal injury.**
- **Be sure to lock outboard motor if it is tilted up, or accidental fall of outboard motor could lead to severe personal injury.**
- **Do not go under outboard motor tilted up and locked, or accidental fall of outboard motor could lead to severe personal injury.**

1. Tilt down the outboard motor.
2. Remove the oil plugs (lower and upper), and completely drain the gear oil into a pan.

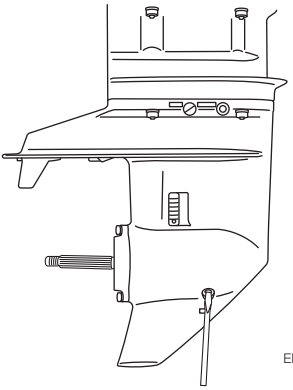

3. Insert the oil tube nozzle into the lower oil plug hole, and fill with gear oil by squeezing the oil tube until oil flows out of the upper plug hole and bubbles is disappeared to remove the air.

ENON00033-0

Note

Use genuine gear oil or the recommended one (API GL-5: SAE #80 to #90).
Required volume: approx. 320 mL (10.8 fl.oz.).

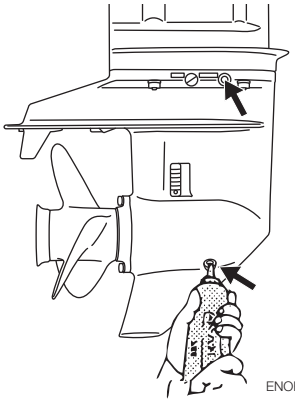

4. Install the upper oil plug, and then remove oil tube nozzle and install the lower oil plug.

ENOW00095-0

⚠ CAUTION

Do not reuse oil plug gasket. Always use new gasket and tighten oil plug properly to prevent entry of water into lower unit.

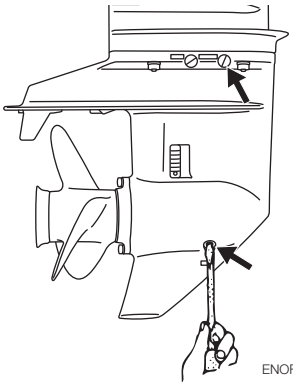

ENOW00928-0

⚠ CAUTION

Wipe off gear oil well immediately if spilled and dispose of it in accordance with local fire prevention and environment protection regulations.

ENON00032-0

Note

If water in the oil, giving it a milky colored appearance. Contact your dealer.

ENON00033-0

Note

Use genuine gear oil or the recommended one (API GL-5: SAE #80 to #90).
Required volume: approx. 320 mL (10.8 fl.oz.).

ENOM00086-A

Propeller replacement

ENOW00084-0

⚠ WARNING

- **Do not begin propeller removal and installation procedure with spark plug caps attached, shift in forward or reverse, main switch at other than "OFF", engine stop switch lock attached to the switch, and starter key attached, or engine could accidentally start leading to serious personal injury. Disconnect battery cable if possible.**
- **The propeller edge is thin and sharp. Wear the groves during replacement to protect your hands.**

ENOW00086-0

⚠ CAUTION

- **Do not install propeller without thrust holder, or propeller boss could be damaged.**
- **Do not reuse split pin.**
- **After installing split pin, spread the pin apart to prevent it from falling out which could lead to the propeller coming off during operation.**

A worn-out or bent propeller will lower the

motor's performance, and cause engine trouble.

1. Put a piece of wood block between propeller blade and anti-ventilation plate to hold propeller.

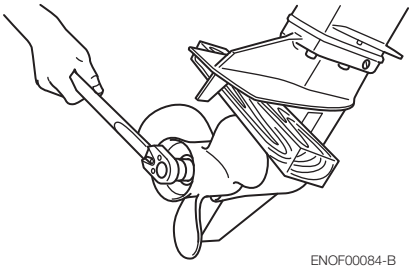

ENOF00084-B

2. Remove the split pin, propeller nut and washer.
3. Remove the propeller and thrust holder.
4. Apply water proof grease to the propeller shaft before installing a new propeller.
5. Install the thrust holder, propeller, stopper, washer and propeller nut onto the shaft.

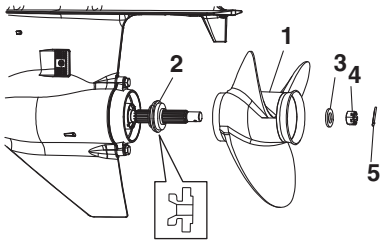

ENOF01432-0

1. Propeller
2. Thrust holder
3. Washer
4. Propeller nut
5. Split pin

6. Tighten the propeller nut to specified torque, and align one of grooves to propeller shaft hole.

Propeller nut torque:
12 N·m (9 ft·lb, 1.2kgf·m)

7. Install a new split pin into the nut hole and bend it.

ENOF00084-D

ENOM00087-A

Spark plugs replacement

ENOW00087-0

⚠ WARNING

- **Do not reuse spark plug with damaged insulation, or sparks can leak through crack, potentially leading to electric shock, explosion and/or fire.**
- **Do not touch spark plugs immediately after stopping engine as they will be hot and could cause severe burns if touched. Allow motor to cool down first.**

ENOW00929-0

⚠ CAUTION

Use only the recommended spark plugs. Spark plugs which have an different heat range may cause engine damage.

If the spark plug(s) is fouled, has carbon build up, or is worn, it should be replaced. When reusing spark plugs, remove dirt from the electrodes and adjust spark gap to specification.

1. Stop the engine.

2. Remove the top cowl.
3. Remove the spark plug caps.
4. Remove the spark plugs by turning it counter-clockwise, using a 5/8" (16 mm) socket wrench and handle that is provided in tool bag.
5. Inspect the spark plug. Replace the spark plug if the electrodes are worn or if the insulators are cracked or chipped.
6. Measure the spark plug electrode gap with a wire type feeler gauge. The gap should be 0.8-0.9 mm (0.031-0.035 inches). If the gap is different, replace the spark plug with a new one

   Use spark plug NGK DCPR-6E.

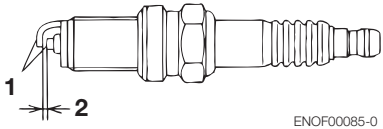

1. Electrode
2. Spark gap (0.8–0.9 mm, 0.031–0.035 in)

7. Install the spark plug by hand and turn it carefully to avoid cross-threading.
8. Tighten the spark plug to the specified torque.

ENON00028-0

Note

- **Spark plug torque:**
  18.0 N·m (13.3 ft·lb) [1.84 kgf·m]

If a torque-wrench is not available when you are fitting a spark plug, a good estimate of the correct torque is 1/4 to 1/2 a turn past finger-tight. Have the spark plug adjusted to the correct torque as soon as possible with a torque-wrench.

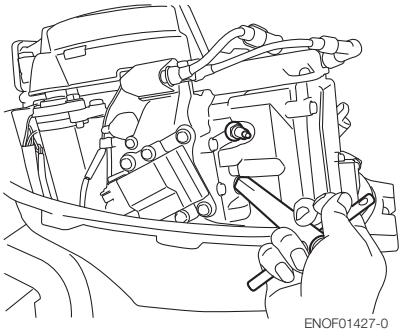

ENOM00088-A

Anode replacement

A sacrificial anode protects the outboard motor from electrolytic corrosion. Anode is located on the gear case, cylinder etc.. When the anode is eroded more than 1/3 of original size, replace it.

ENON00029-0

Notes

- Never grease or paint the anode.
- At each inspection re-tighten the anode attaching bolt. As it is likely to be subjected to electrolytic corrosion.

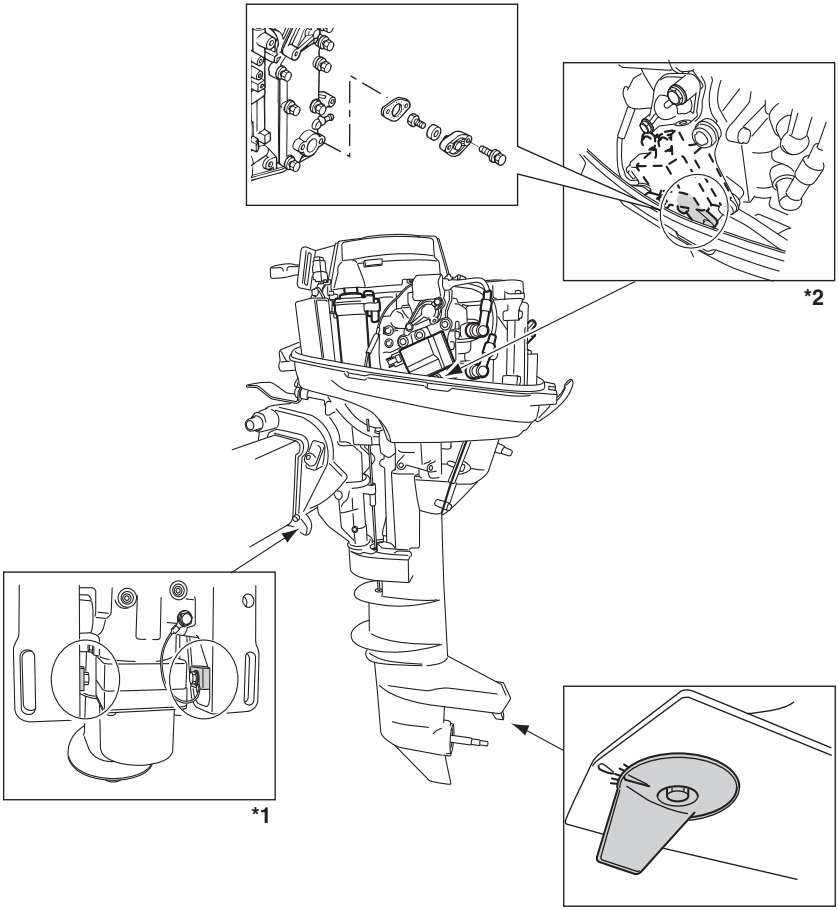

ENOF01428-0

*1 : Only for Power tilt model
*2 : Remove CD unit to access the anode.

ENOM00089-B

Power Tilt oil checking

ENOW00088-0

⚠ WARNING

- **Be sure that outboard motor is secured to transom or service stand, or accidental drop or fall of outboard motor could lead to severe personal injury.**
- **Be sure to lock outboard motor if it is tilted up, or accidental fall of outboard motor could lead to severe personal injury.**
- **Do not go under outboard motor tilted up and locked, or accidental fall of outboard motor could lead to severe personal injury.**

ENOW00089-A

⚠ CAUTION

Do not unscrew the oil cap with the outboard motor tilted down. Pressurized oil in the oil tank may spurt out.

Check the oil level in the reservoir tank while the tank is kept in a vertical position.

1. Tilt the outboard motor up and lock the tilt with the tilt stopper.
2. Remove the oil cap by turning counter clockwise, then check if the oil level reaches the bottom line of the plug hole.

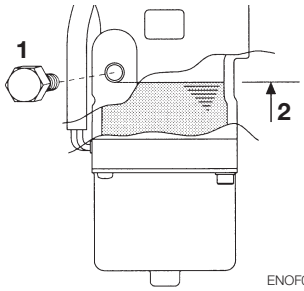

ENOF00558-0

1. Oil cap
2. Oil level

Recommended oil

Use an automatic transmission fluid or equivalent.

Recommended oils are as shown below.

ATF Dexron III

Air purging from the Power Trim and Tilt unit.

Entrapped air in the Power Tilt unit will cause poor tilting movement and increased noise.

1. With the outboard motor mounted on the boat, set the manual release valve to the Manual side, and tilt the outboard motor manually up/down 5-6 times while checking the oil level.
2. When done, close the valve by turning it clockwise towards the Power side.

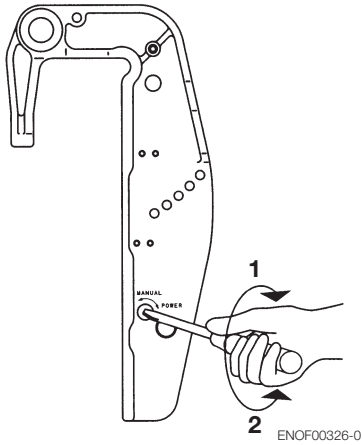

ENOF00326-0

1. POWER
2. MANUAL

ENOM00960-0

Grease point

Apply water proof grease to the parts shown below.

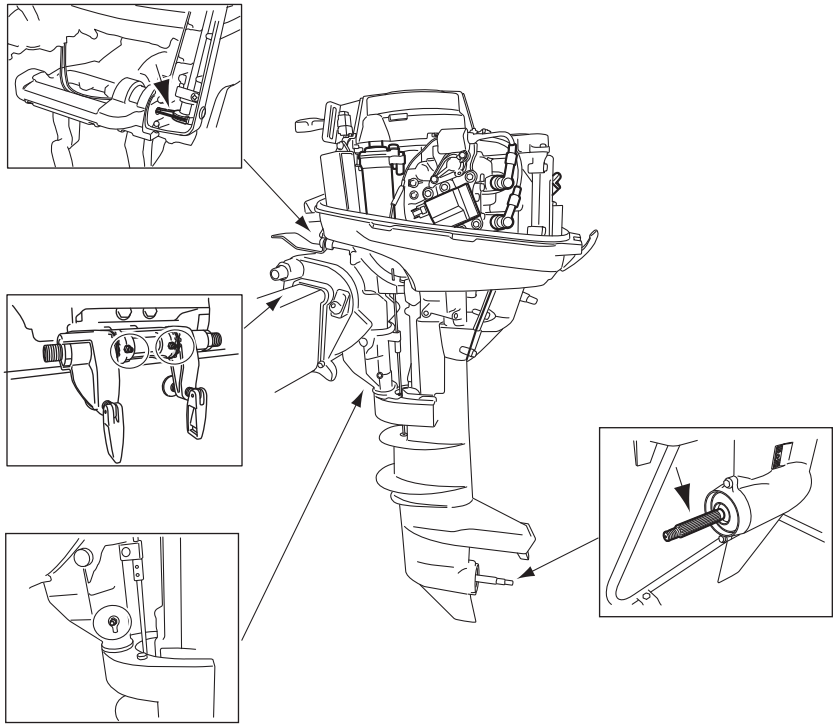

ENOF01429-0

ENOM00100-A

3. Off-season storage

ENOW00934-0

⚠ WARNING

- **Be sure to disconnect fuel connector except when operating engine.**
- **Fuel leakage is a fire or explosion hazard, which can cause serious injury or death.**

ENOW00097-0

⚠ WARNING

Be sure to use cloth to remove fuel remaining in the cowl and dispose of it in accordance with local fire prevention and environment protection regulations.

ENOW00096-0

⚠ CAUTION

Before servicing the motor for storage:
- **Remove the battery cables.**
- **Remove the spark plug caps from the spark plugs.**
- **Do not run the motor out of the water.**

Before you put your outboard motor in storage, it is a good opportunity to have it serviced and prepared by your dealer.
Be sure to use fuel stabilizer while running the motor before storage. (See page 78)

ENOM00101-A

Engine

1. Wash the engine exterior and flush the cooling water system thoroughly with fresh water. Drain the water completely.
   Wipe off any surface water with an oily rag.
2. Remove the fuel hose from the outboard motor.
3. Drain all fuel from the fuel hoses, fuel pump and carburetor (See page 79), and clean these parts.
   Keep in mind that if gasoline is kept in the carburetor for a long time, gum and varnish will develop, causing the float valve to stick, restricting the fuel flow.
4. Remove the spark plugs and put a teaspoon of engine oil or spray storage oil into the combustion chamber through the spark plug holes.
5. Turn the starter motor several turns to lubricate inside the cylinder.

ENOW00930-0

⚠ WARNING

- **Be sure to remove stop switch lock to prevent ignited the spark plugs.**
- **Put a cloth to spark plug hole and wipe up any spilled engine oil, when cranking the outboard motor.**

6. Change the engine oil (See page 67).
7. Change the gear oil in the gear case (See page 70).
8. Apply grease to grease point (See page 76).

9. Stand the outboard motor up vertically in a dry place.

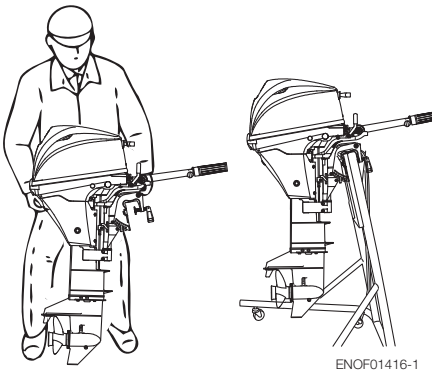

ENOF01416-1

ENOW00066-0

⚠ CAUTION

Do not carry or store outboard motor in any of positions described below. Otherwise, engine damage or property damage could result from leaking oil.

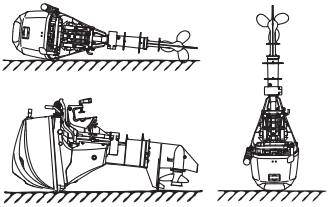

ENOF01414-1

ENON00021-A

Note

- If the outboard motor must be laid down be sure drain the fuel and engine oil, then the outboard motor on a cushion as shown in the drawing below (See page 77 and 55).
- Elevate power unit 2 inches to 4 inches if traveling to avoid oil spillage.

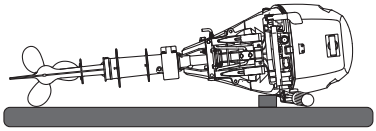

ENOF01415-0

ENOM00950-0

Adding a fuel stabilizer

When adding a fuel stabilizer additive (commercially available), first fill the fuel tank with fresh fuel. If the fuel tank is only partially filled, air in the tank can cause the fuel to deteriorate during storage.

1. Before adding fuel stabilizer additive, drain the carburetor (See page 79).
2. Follow the instructions on the label when adding the fuel stabilizer additive.
3. After adding the additive, let the outboard motor run in the water for 10 minutes to make sure any old fuel in the fuel system has been completely replaced by the fuel with additive.
4. Turn the engine OFF

ENON00891-0

Note

If your motor is used occasionally, it is recommended to use a good fuel stabilizer in every tank of fuel and keep the container full to reduce condensation and evaporation.

ENOM00970-0

Fuel system draining

ENOW00028-A

⚠ WARNING

For details on handling fuel, contact an authorized dealer.

Fuel and fuel vapors are extremely flammable and can be explosive.

- **If fuel is spilled, wipe it up immediately.**
- **Keep the fuel tank well away from sources of ignition, e.g. sparks or open flames**
- **Perform all work outdoors or in a well ventilated place.**

ENOW00097-0

⚠ WARNING

Be sure to use cloth to remove fuel remaining in the cowl and dispose of it in accordance with local fire prevention and environment protection regulations.

1. Disconnect the fuel hose from the outboard motor.
2. Remove the top cowl.
3. Place an approved fuel container under the drain screw and use a funnel to avoid spilling fuel.
4. Loosen the carburetor drain screw.
5. Tilt up the outboard motor until fuel flows out of the drain hole.
6. Leave the outboard motor in this position until all fuel has been drained.
7. When thoroughly drained, retighten the drain screw securely.
8. Check the drained fuel for the presence of water or other contaminants. If either is present, reassemble the outboard motor, refill the carburetor with fuel, and then drain the fuel again. Repeat this procedure until no water or other contaminants are present in the drained fuel.

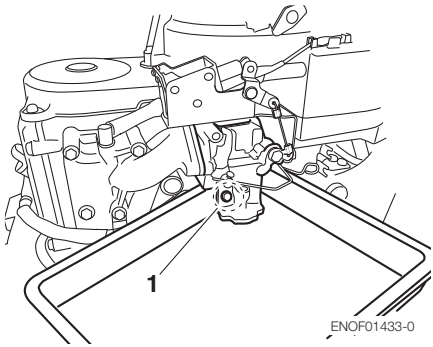

1. Carburetor drain screw

ENOM00102-0

Battery

ENOW00931-A

⚠ WARNING

- **Place the battery away from any source of fire, sparks and open flames such as burners or welding equipment.**
- **Place the battery away from fuel tank. Accidental sparks of battery may cause explosion of gasoline.**

1. Disconnect the battery cables and be sure to remove the negative terminal first.
2. Wipe off any chemical deposits, dirt, or grease.
3. Apply grease to the battery terminals.
4. Charge the battery completely before storing it for the winter.

5. Recharge the battery once a month to prevent it from discharging and the electrolyte from deteriorating.
6. Store the battery in a dry place.

ENOM00104-A

4. Pre-season check

The following steps must be taken when first using the engine after off-season storage.

1. Check that the shift and throttle function properly. (Be sure to turn the propeller shaft when checking the shift function or else the shift linkage may be damaged.)
2. Check the electrolyte level, and measure the voltage and specific gravity of the battery.

Specific Gravity at 20°C	Terminal Voltage (V)	Charge Condition
1.120	10.5	Fully discharged
1.160	11.1	1/4 charged
1.210	11.7	1/2 charged
1.250	12	3/4 charged
1.280	13.2	Fully charged

3. Check that the battery is secure and the battery cables are properly installed.
4. Change the engine oil (See page 67).
5. Before starting the engine, disconnect stop switch lock and crank approximately 10 times in order to prime the oil pump.
6. Fill fuel tank completely.
7. Start the engine and warm up the engine for 3 minutes in the “NEUTRAL” position.
8. Run the engine for 5 minutes at the slowest speed.
9. Run the engine for 10 minutes at half throttle. The oil used for storage inside the engine will be circulated out to assure optimum performance.

ENOM00105-A

5. Submerged outboard motor

ENOW00098-0

⚠ CAUTION

Do not attempt to start submerged outboard motor immediately after it is recovered, or engine could be severely damaged.

After taking your outboard motor out of the water, immediately take it to your dealer.
The following are the emergency measures to be taken for a submerged outboard motor, if you can not take it your dealer right away.

1. Wash the outboard motor with fresh water to remove salt or dirt.
2. Remove the engine oil drain screw and completely drain water and oil from the engine.
3. Remove the spark plugs, and completely drain the water from the engine by pulling recoil starter several times.
   Replace oil filter and oil to the correct level.
   The oil and filter may need to be changed again after running a short period to get all moisture completely out of the crankcase.
4. Inject a sufficient amount of engine oil through the spark plug holes.
   Pull the recoil starter rope several times to circulate the oil throughout the outboard motor.

ENOM00106-A

6. Cold weather precautions

If you moor your boat in cold weather at temperatures below 0°C (32°F), there is the danger of remained water freezing in the cooling water pump, which may damage the pump, impeller, etc. To avoid this problem, submerge the lower half of the outboard motor into the water.

ENOM00107-A

7. Striking underwater object

ENOW00935-0

⚠ CAUTION

Striking the sea bottom or an underwater object may severely damage the outboard motor.

Follow the procedure below and consult a dealer as soon as possible.

1. Stop the engine immediately.
2. Check the control system, gear case, boat transom etc.
3. Return to the nearest habor slowly and carefully.
4. Consult a dealer check the outboard motor before operation again.

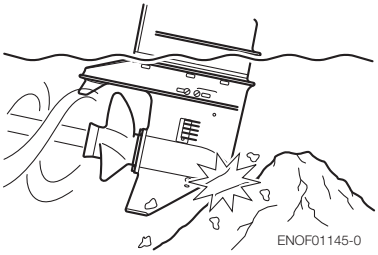

ENOM00120-0

8. Auxiliary outboard motor operation

When the auxiliary outboard motor will not be used, be sure to remove the stop switch lock, shift into forward, and then tilt the outboard motor up. Otherwise, over-rotation of the propeller due to water spray could damage the gear.

TROUBLESHOOTING

ENOM00561-0

If you encounter a problem, consult the check list below to determine the cause and to take the proper action.

An authorized dealer will always be happy to provide any assistance and information.

	Engine failing to start	Engine starting but stopping soon	Poor idling	Poor acceleration	Engine speed abnormally high	Engine speed abnormally low	Boat speed low	Overheating of engine	Warning lamp ON	Power tilt inoperative	Possible cause
FUEL SYSTEM	●	●									Empty fuel tank
	●	●	●	●		●	●	●			Incorrect connection of fuel system
	●	●	●	●		●	●	●			Air entering fuel line
	●	●	●	●		●	●	●			Deformed or damaged fuel hose
	●	●	●	●		●	●	●			Closed air vent on fuel tank
	●	●	●	●		●	●	●			Clogged fuel filter, fuel pump, or carburetor
			●	●		●	●	●			Use of improper engine oil
	●	●	●	●			●	●			Use of improper gasoline
	●	●	●	●							Excessive supply of fuel
	●	●	●	●		●	●	●			Poor carburetor adjustment
ELECTRICAL SYSTEM	●	●	●	●		●	●	●			Spark plug other than specified
	●	●	●	●		●	●				Dirt, soot, etc. on spark plug
						●			●		Faulty oil pressure switch
	●	●	●	●		●	●				No Spark or weak spark
	●										Short circuit of engine stop switch
	●		●	●			●	●			Ignition timing incorrect
	●									●	Lock plate not fitted
	●									●	Disconnection of wire or loose ground connection
	●										Blown 20 Amp fuse in the starting circuit
	●										Not shifted to neutral position
	●									●	Weak battery or battery connections are loose or corroded
	●									●	Ignition key switch failure
	●									●	Wiring or electrical connection faulty
	●										Starter motor or starter solenoid failure

	Engine failing to start	Engine starting but stopping soon	Poor idling	Poor acceleration	Engine speed abnormally high	Engine speed abnormally low	Boat speed low	Overheating of engine	Warning lamp ON	Power tilt inoperative	Possible cause
COMPRESSION & OIL SYSTEM		●	●	●		●	●				Low compression
			●					●			Carbon deposits in the combustion chamber
				●			●				Incorrect valve clearance
								●			Low oil pressure/level
ENGINE OIL SYSTEM						●		●	●		Low oil level
								●	●		Use of improper oil
						●		●	●		Oil deterioration
						●		●	●		Clogged oil strainer
						●		●	●		Faulty oil pump
OTHERS	●		●	●		●	●				Incorrect adjustment of throttle link
							●	●			Insufficient cooling water flow, clogged or defective pump
			●				●	●			Faulty thermostat
				●	●		●	●			Cavitation or ventilation
				●	●	●	●	●			Incorrect propeller selection
			●	●	●	●	●	●			Damaged or bent propeller
				●	●		●	●			Improper thrust rod position
				●	●	●	●	●			Unbalanced load on boat
				●	●	●	●	●			Transom too high or too low

ACCESSORIES KIT

ENOM00562-1

The following a list of the tools and spare parts provided with the motor.

Items		Quantity	Remark
Service tools	Tool bag	1	
	Pliers	1	
	Socket wrench	1	10 × 13 mm
	Socket wrench	1	16 mm (spark plug)
	Socket wrench handle	1	
	Screwdrivers	1	Cross-and straight-point
	Screwdriver handle	1	
Spare parts	Emergency starter rope	1	1600 mm
	Spark plug	1	NGK: DCPR6E
	Split pin	1	
	Stop switch lock	1	
Parts Packaged with Engine	Fuel tank	1	12 L
	Primer bulb	1 set	
	Remote control box	1 set	EP/EPT only
	Harness sleeve	1	EP only 12–90 mm (Tool bag)
	Bracket bolts, nuts and washers	1 set	EP only
	Bracket fixing bolt	4	8 mm EPT/EFT only
	Nut	4	8 mm EPT/EFT only
	Washer	4 (big)	8 mm EPT/EFT only
	Washer	4 (small)	8 mm EPT/EFT only

PROPELLER TABLE

ENOM00111-0

Use a genuine propeller.

A propeller must be selected so that the engine rpm measured at wide open throttle while cruising is within the recommended range.

5000–6000 min^{-1} (rpm)

	Propeller Mark	Propeller Size (Diameter × pitch)		
		No. of Blades	in.	mm
Light boats	9.5	3	8.9 × 10	226 × 255
	8.5	3	8.9 × 8.3	226 × 211
	7.5	3	8.5 × 7.5	216 × 190
	7.0	3	8.9 × 7.0	226 × 178
Heavy boats	6.5	3	8.5 × 6.5	216 × 165

	Propeller Mark	Propeller Size (Diameter × pitch)		
		No. of Blades	in.	mm
Light boats	7.0	4	8.7 × 7.0	226 × 178
Heavy boats	5.0	4	8.7 × 5.0	221 × 127

TOHATSU

OWNER'S MANUAL

MFS 6BZ
MFS 8B
MFS 9.8B

003-11113-2AF1 1604NB
Printed in Japan

MEMO

MEMO

TOHATSU

en

OWNER'S MANUAL

fr

MANUEL DE L'UTILISATEUR

es

MANUAL DEL PROPIETARIO

de

BENUTZERHANDBUCH

MFS 6BZ
MFS 8B
MFS 9.8B

TOHATSU CORPORATION
Address : 5-4, Azusawa 3-Chome, Itabashi-Ku,
Tokyo, Japan
Phone : TOKYO +81-3-3966-3117
FAX : TOKYO +81-3-3966-2951
URL : www.tohatsu.co.jp

003-11113-2AF1 1604NB
Printed in Japan